Architectural Testing

NFRC U-FACTOR, SHGC, VT, & CONDENSATION RESISTANCE COMPUTER SIMULATION REPORT

Rendered to:
MERRILL MILLWORK

SERIES/MODEL:
Park-Vue Aluminum Clad Telescoping Door

Report Number: **C7572.01-201-45**
Report Date: **04/16/13**

849 Western Avenue North
St. Paul, MN 55117
phone: 651-636-3835
fax: 651-636-3843
www.archtest.com

Architectural Testing

NFRC U-FACTOR, SHGC, VT, & CONDENSATION RESISTANCE
COMPUTER SIMULATION REPORT

Rendered to:
MERRILL MILLWORK
1300 W. Taylor
Merrill, Wisconsin 54452

Report Number:	C7572.01-201-45
Simulation Date:	04/16/13
Report Date:	04/16/13

Project Summary:

Architectural Testing, Inc. was contracted to perform U-Factor, Solar Heat Gain Coefficient, Visible Transmittance, and Condensation Resistance* computer simulations in accordance with the National Fenestration Rating Council (NFRC). The products were evaluated in full compliance with NFRC requirements to the standards listed below.

**NFRC's Condensation Resistance rating is NOT equivalent to a Condensation Resistance Factor (CRF) determined in accordance with AAMA 1503.*

Standards:

NFRC 100-2010:	*Procedure for Determining Fenestration Product U-Factors*
NFRC 200-2010:	*Procedure for Determining Fenestration Product Solar Heat Gain Coefficient and Visible Transmittance at Normal Incidence*
NFRC 500-2010:	*Procedure for Determining Fenestration Product Condensation Resistance Values*

Software:

Frame and Edge Modeling:	THERM 6.3.46
Center-of-Glass Modeling:	WINDOW 6.3.74
Total Product Calculations:	WINDOW 6.3.74
Spectral Data Library:	IGDB 28.0

Simulations Specimen Description:

Series/Model:	Park-Vue Aluminum Clad Telescoping Door
Type:	Sliding Glass Door , Sliding Glass Door (XX or OX)
Frame Material:	WA Aluminum / Wood Combination
Sash Material:	WA Aluminum / Wood Combination
Standard Size:	2000mm x 2000mm

849 Western Avenue North
St. Paul, MN 55117
phone: 651-636-3835
fax: 651-636-3843
www.archtest.com

Modeling Assumptions/Technical Interpretations:

1) Center-of-glazing grouping per NFRC 100-2010, section 4.2.4.1: DS and 4mm glass were grouped with DS as group leader.
2) Dividers were not modeled because there was at least DS of air space between the divider and both adjacent glazing surfaces per NFRC 100-2010, section 4.2.4.1.D.ii.a.
3) Double door was modeled to represent triple door assembly per NFRC 100-2010, section 4.4, table 4-3, footnote 5.

Specialty Products Table:

The specialty products method allow the manufacturer to determine the overall product SHGC and VT for any glazing option. The center of glass SHGC and/or VT must be determined using WINDOW 6.3.74. The method gives overall product SHGC and VT indexed on center of glass properties. All values used in the calculations are truncated to six decimal place precision.

Standard IG	No Dividers	Dividers < 1	Dividers > 1
SHGC0	0.002302	0.005551	0.008586
SHGC1	0.810263	0.714028	0.624111
VT0	0.000000	0.000000	0.000000
VT1	0.807961	0.708477	0.615525

SHGC = SHGC0 + SHGCc (SHGC1 - SHGC0)
VT = VT0 + VTc (VT1 - VT0)

Blind in Glass	No Dividers	Dividers < 1	Dividers > 1
SHGC0	0.005128	0.008250	0.011159
SHGC1	0.748508	0.656340	0.570491
VT0	0.000000	0.000000	0.000000
VT1	0.743380	0.648090	0.559332

SHGC = SHGC0 + SHGCc (SHGC1 - SHGC0)
VT = VT0 + VTc (VT1 - VT0)

Validation Matrix:

The following products are part of a validation matrix. Only one is required for validation testing.

Product Line	*Report Number*
None	-

Spacer Option Description

	Sealant		
Spacer Type	*Primary*	*Secondary*	*Code*
Duralite Spacer	Butyl Rubber	None	P1-S
XL Edge Spacer	Polyisobutylene	Silicone	SS-D
Technoform Wave/ I-Spacer	Polyisobutylene	Silicone	TS-D
Aluminum Spacer	Butyl Rubber	Polysulphide	A1-D

Grid Option Description

Grid Size	*Grid Type*	*Grid Pattern*
0.188" x 0.625"	Aluminum Rectangular Grid	NFRC Standard
0.188" x 0.625"	Aluminum Rectangular Grid	NFRC Standard

Reinforcement Option Description

Location	*Material*
None	-

Gas Filling Technique Description

Fill Type	*Method*
100% Air	
90% Argon	Single Probe

Edge-of-Glass Construction

Interior Condition	Wood Glazing Bead
Exterior Condition	Silicone

Weatherstripping

Type	*Quantity*	*Location*
Flexible Vinyl Fins	3 Rows	Head and Jambs
Mohair	4 Rows	Sill
Mohair	2 Rows	Meeting Stile

Frame/Sash Materials Finish

Interior	Wood
Exterior	Painted Aluminum

NFRC 100/200/500 Summary Sheet
Park-Vue Aluminum Clad Telescoping Door

ID	Pane Thickness 1	Gap Width 1	Pane Thickness 2	Gap Width 2	Pane Thickness 3	Gap Width 3	Pane Thickness 4	Gap Fill	Low-e (Surface#)	Tint	Spacer	Grid Type
	U-Factor			Solar Heat Gain Coefficient (SHGC) Grids (None / <1 / >=1)					Visible Transmittance (VT) Grids (None / <1 / >=1)		Condensation Resistance	
1	DS 270 Air											
	0.118	0.641	0.117					AIR	0.037(#2)	CL	SS-D	N,G,S
	U-Factor 0.34			SHGC (N / <1 / >1) 0.30 / 0.27 / 0.24					VT (N / <1 / >1) 0.57 / 0.50 / 0.43		CR 52	
	4mm 270 Air											
	0.157	0.555	0.160					AIR	0.037(#2)	CL	SS-D	N,G,S
	U-Factor 0.34			SHGC (N / <1 / >1) 0.30 / 0.26 / 0.23					VT (N / <1 / >1) 0.56 / 0.49 / 0.43		CR 52	
2	DS 270 Arg											
	0.118	0.641	0.117					ARG90	0.037(#2)	CL	SS-D	N,G,S
	U-Factor 0.30			SHGC (N / <1 / >1) 0.30 / 0.27 / 0.23					VT (N / <1 / >1) 0.57 / 0.50 / 0.43		CR 55	
	4mm 270 Arg											
	0.157	0.555	0.160					ARG90	0.037(#2)	CL	SS-D	N,G,S
	U-Factor 0.30			SHGC (N / <1 / >1) 0.29 / 0.26 / 0.23					VT (N / <1 / >1) 0.56 / 0.49 / 0.43		CR 55	
3	DS 366 Air											
	0.117	0.641	0.117					AIR	0.022(#2)	CL	SS-D	N,G,S
	U-Factor 0.33			SHGC (N / <1 / >1) 0.22 / 0.20 / 0.18					VT (N / <1 / >1) 0.52 / 0.46 / 0.40		CR 53	
	4mm 366 Air											
	0.153	0.555	0.160					AIR	0.022(#2)	CL	SS-D	N,G,S
	U-Factor 0.33			SHGC (N / <1 / >1) 0.23 / 0.20 / 0.18					VT (N / <1 / >1) 0.52 / 0.46 / 0.40		CR 53	
4	DS 366 Arg											
	0.117	0.641	0.117					ARG90	0.022(#2)	CL	SS-D	N,G,S
	U-Factor 0.30			SHGC (N / <1 / >1) 0.22 / 0.20 / 0.18					VT (N / <1 / >1) 0.52 / 0.46 / 0.40		CR 55	
	4mm 366 Arg											
	0.153	0.555	0.160					ARG90	0.022(#2)	CL	SS-D	N,G,S
	U-Factor 0.30			SHGC (N / <1 / >1) 0.22 / 0.20 / 0.18					VT (N / <1 / >1) 0.52 / 0.46 / 0.40		CR 55	
5	DS 270 Air i81											
	0.118	0.641	0.117					AIR	0.037(#2) / 0.149(#4)	CL	SS-D	N,G,S
	U-Factor 0.28			SHGC (N / <1 / >1) 0.27 / 0.24 / 0.22					VT (N / <1 / >1) 0.51 / 0.44 / 0.39		CR 42	
	4mm 270 Air i81											
	0.157	0.555	0.160					AIR	0.037(#2) / 0.149(#4)	CL	SS-D	N,G,S
	U-Factor 0.28			SHGC (N / <1 / >1) 0.27 / 0.24 / 0.21					VT (N / <1 / >1) 0.50 / 0.44 / 0.38		CR 42	

NFRC 100/200/500 Summary Sheet
Park-Vue Aluminum Clad Telescoping Door

ID	Pane Thickness 1	Gap Width 1	Pane Thickness 2	Gap Width 2	Pane Thickness 3	Gap Width 3	Pane Thickness 4	Gap Fill	Low-e (Surface#)	Tint	Spacer	Grid Type
	U-Factor			**Solar Heat Gain Coefficient (SHGC)** Grids (None / <1 / >=1)					**Visible Transmittance (VT)** Grids (None / <1 / >=1)		**Condensation Resistance**	
6	DS 270 Arg i81											
	0.118	0.641	0.117					ARG90	0.037(#2) / 0.149(#4)	CL	SS-D	N,G,S
	U-Factor		**0.25**	**SHGC (N / <1 / >1)**			**0.27 / 0.24 / 0.21**		**VT (N / <1 / >1)**	**0.51 / 0.44 / 0.39**	**CR**	**45**
	4mm 270 Arg i81											
	0.157	0.555	0.160					ARG90	0.037(#2) / 0.149(#4)	CL	SS-D	N,G,S
	U-Factor		**0.25**	**SHGC (N / <1 / >1)**			**0.27 / 0.24 / 0.21**		**VT (N / <1 / >1)**	**0.50 / 0.44 / 0.38**	**CR**	**45**
7	DS 70/36 Air											
	0.117	0.641	0.117					AIR	0.036(#2)	CL	P1-S	N,G,S
	U-Factor		**0.33**	**SHGC (N / <1 / >1)**			**0.30 / 0.26 / 0.23**		**VT (N / <1 / >1)**	**0.56 / 0.49 / 0.43**	**CR**	**57**
	4mm 70/36 Air											
	0.151	0.555	0.160					AIR	0.036(#2)	CL	P1-S	N,G,S
	U-Factor		**0.33**	**SHGC (N / <1 / >1)**			**0.30 / 0.26 / 0.23**		**VT (N / <1 / >1)**	**0.56 / 0.49 / 0.43**	**CR**	**57**
8	DS 70/36 Arg											
	0.117	0.641	0.117					ARG90	0.036(#2)	CL	P1-S	N,G,S
	U-Factor		**0.29**	**SHGC (N / <1 / >1)**			**0.29 / 0.26 / 0.23**		**VT (N / <1 / >1)**	**0.56 / 0.49 / 0.43**	**CR**	**60**
	4mm 70/36 Arg											
	0.151	0.555	0.160					ARG90	0.036(#2)	CL	P1-S	N,G,S
	U-Factor		**0.29**	**SHGC (N / <1 / >1)**			**0.29 / 0.26 / 0.23**		**VT (N / <1 / >1)**	**0.56 / 0.49 / 0.43**	**CR**	**60**
9	DS 70/36 Air IS20											
	0.117	0.641	0.125					AIR	0.036(#2) / 0.198(#4)	CL	P1-S	N,G,S
	U-Factor		**0.27**	**SHGC (N / <1 / >1)**			**0.29 / 0.26 / 0.23**		**VT (N / <1 / >1)**	**0.55 / 0.48 / 0.42**	**CR**	**47**
	4mm 70/36 Air IS20											
	0.151	0.555	0.151					AIR	0.036(#2) / 0.198(#4)	CL	P1-S	N,G,S
	U-Factor		**0.27**	**SHGC (N / <1 / >1)**			**0.29 / 0.25 / 0.22**		**VT (N / <1 / >1)**	**0.54 / 0.47 / 0.41**	**CR**	**47**
10	DS 70/36 Arg IS20											
	0.117	0.641	0.125					ARG90	0.036(#2) / 0.198(#4)	CL	P1-S	N,G,S
	U-Factor		**0.25**	**SHGC (N / <1 / >1)**			**0.29 / 0.25 / 0.22**		**VT (N / <1 / >1)**	**0.55 / 0.48 / 0.42**	**CR**	**50**
	4mm 70/36 Arg IS15											
	0.151	0.555	0.151					ARG90	0.036(#2) / 0.198(#4)	CL	P1-S	N,G,S
	U-Factor		**0.25**	**SHGC (N / <1 / >1)**			**0.28 / 0.25 / 0.22**		**VT (N / <1 / >1)**	**0.54 / 0.47 / 0.41**	**CR**	**50**

NFRC 100/200/500 Summary Sheet
Park-Vue Aluminum Clad Telescoping Door

ID	Pane Thickness 1	Gap Width 1	Pane Thickness 2	Gap Width 2	Pane Thickness 3	Gap Width 3	Pane Thickness 4	Gap Fill	Low-e (Surface#)	Tint	Spacer	Grid Type
	U-Factor			**Solar Heat Gain Coefficient (SHGC)** Grids (None / <1 / >=1)					**Visible Transmittance (VT)** Grids (None / <1 / >=1)		**Condensation Resistance**	
11	DS SB70 Arg											
	0.129	0.500	0.117					ARG90	0.018(#2)	CL	TS-D	N,G,S
	U-Factor		**0.29**	**SHGC (N / <1 / >1)**			**0.22 / 0.20 / 0.18**		**VT (N / <1 / >1)**	**0.52 / 0.46 / 0.40**	**CR**	**54**
12	RSL Blind											
	0.123	0.750	0.117					AIR	0.148(#2)	BG	A1-D	N,G,S
	U-Factor		**0.41**	**SHGC (N / <1 / >1)**			**0.49 / 0.43 / 0.37**		**VT (N / <1 / >1)**	**0.55 / 0.48 / 0.42**	**CR**	**45**

The Condensation Resistance results obtained from this procedure are for controlled laboratory conditions and do not include the effects of air movement through the specimen, solar radiation, and the thermal bridging that may occur due to the specific design and construction of the fenestration system opening.

Ratings values included in this report are for submittals to an NFRC-licensed IA and are not meant to be used directly for labeling purposes. Only those values identified on a valid Certification Authorization Report (CAR) by an NFRC accredited Inspection Agency (IA) are to be used for labeling purposes. The ratings values were rounded in accordance to NFRC 601, NFRC Unit and Measurement Policy.

Architectural Testing, Inc. is an NFRC accredited simulation laboratory and all simulations were conducted in full compliance with NFRC approved procedures and specifications. The NFRC procedure requires that the computational results be verified through actual test results.

Architectural Testing will service this report for the entire test record retention period. Test records that are retained such as detailed drawings, datasheets, representative samples of test specimens, or other pertinent project documentation will be retained by Architectural Testing, Inc. for the entire test record retention period. The test record retention end date for this report is April 16, 2017.

Results obtained are simulated values and were secured by using the designated test methods. This report does not constitute certification of this product nor an opinion or endorsement by this laboratory. It is the exclusive property of the client so named herein and relates only to the product simulated. This report may not be reproduced, except in full, without the written approval of Architectural Testing, Inc.

For ARCHITECTURAL TESTING, INC.:

SIMULATED BY:

Chad E. Johnson
Simulation Technician

REVIEWED BY:

Heather M. Duneman
Senior Simulation Technician
Simulator-In-Responsible-Charge

CEJ:cej
C7572.01-201-45

Attachments (pages): This report is complete only when all attachments listed are included.
Appendix A: Drawings and Bill of Materials (44)

Revision Log

Rev. #	Date	Page(s)	Revision(s)
01-R0	04/16/13	All	Original report issue.

All drawings and Bills of Material used to simulate this product are enclosed in this Appendix

Appendix A

C7572.01-201-45

Merrill Millwork
Park Vue Clad Sliding Patio Door

	Item	Dwg#
Sections		
1	Standard Sash Vertical Section	SPD-200
2	Standard Sash Horizontal Section	SPD-280
3	High Profile Sash Vertical Section	SPD-240
4	High Profile Sash Horizontal Section	SPD-320
Wood Profiles		
5	Standard Sash Active Rail	NA
6	Standard Sash Active Stile	NA
7	Standard Sash Fixed Rail	NA
8	Standard Sash Fixed Stile	NA
9	Standard Sash Interlock	NA
10	High Profile Sash Active Rail	NA
11	High Profile Sash Active Stile	NA
12	High Profile Sash Interlock	NA
13	Head	31300 R4
14	Parting Stop	31301 R4
15	Head Stop	31302 R4
16	Side Stop	31303 R4
17	Brickmould	31304 R4
18	Glazing Stop	NA
19	Interlock Filler	NA
Clad Profiles		
20	Brickmould	D10450
21	Standard Sash Cladding	128624
22	Standard Sash Interlock Cladding	128954
23	High Profile Sash Cladding	131691
24	High Profile Interlock Cladding	131691
25	Edge Cover	85821
Other Profiles		
26	Vinyl Interlock	D10640
27	Pile Weatherstrip	D10580
28	Vinyl Parting Stop	Q5268
29	Hinged Jamb Weatherstrip	PP0810
30	Fiberglass Sill	F008.idw
31	Roller Track	D10440
32	XL Edge Spacer	NA
33	Dividers	NA

Architectural Testing

Report #: C7572.01-201.45

Date: 4-19-2013

Verified by:

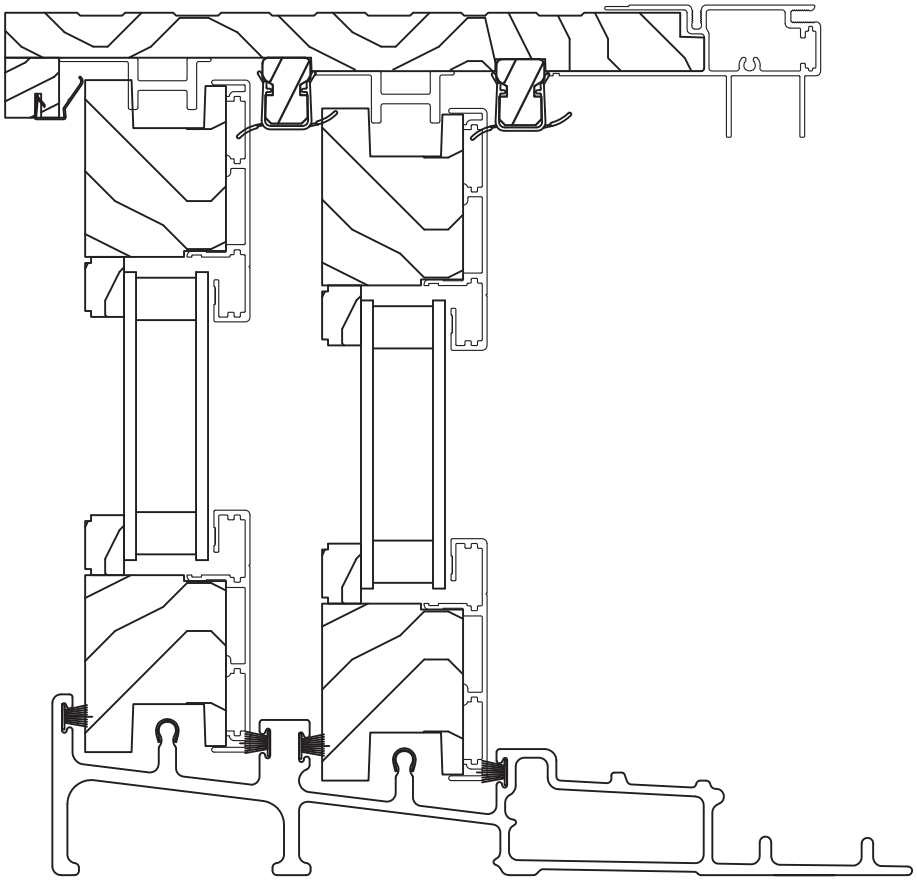

Merrill Millwork

PARK-VUE

PATIO DOORS

Architectural Testing

Report #: C7572.01-201.45

Date: 4-19-2013

Verified by:

Vertical Assembly

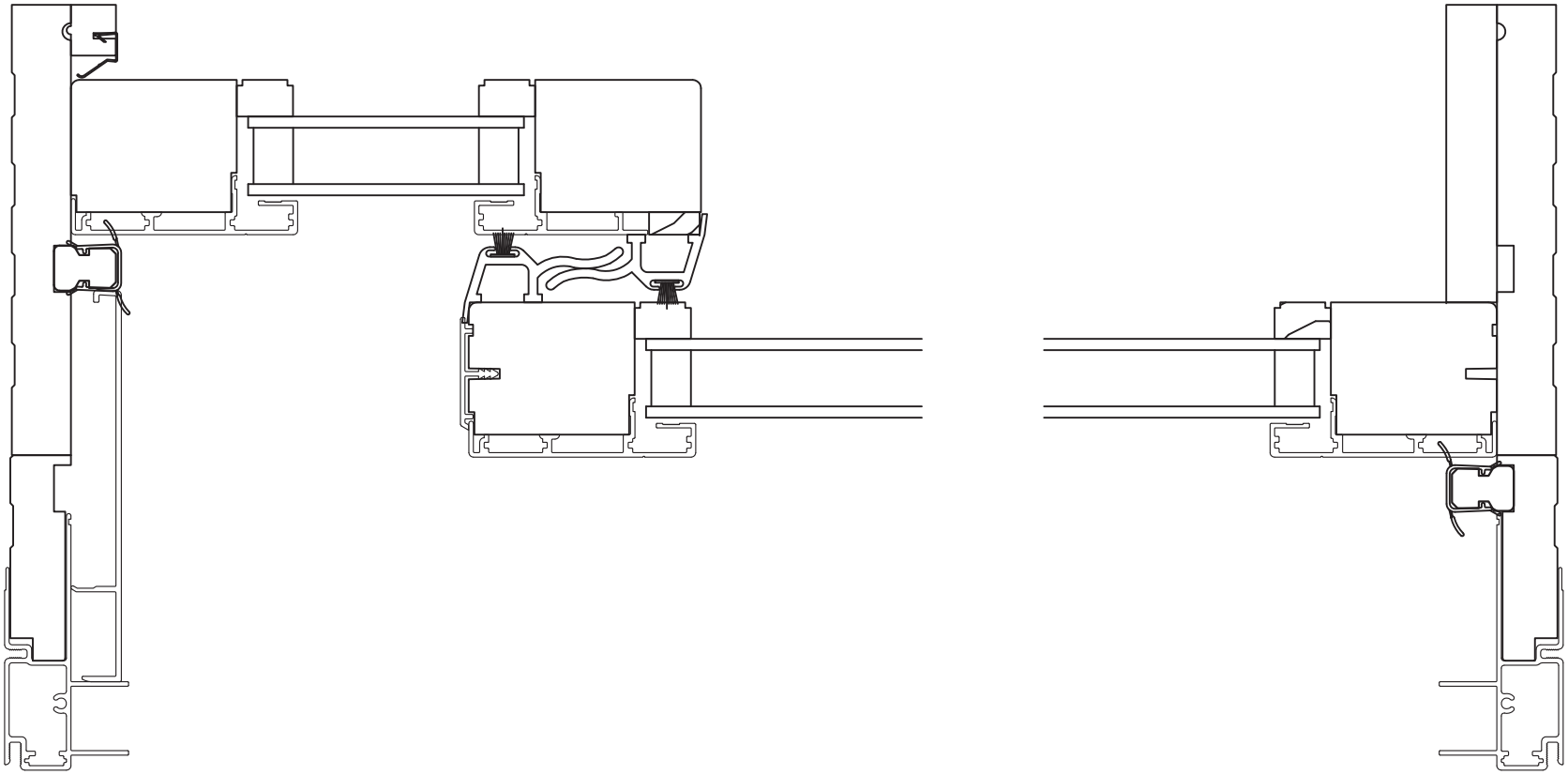

Merrill Millwork

PARK-VUE

PATIO DOORS

Architectural Testing

Report #: C7572.01-201.45

Date: 4-19-2013

Verified by: Chad E. Jordan

Horizontal Assembly

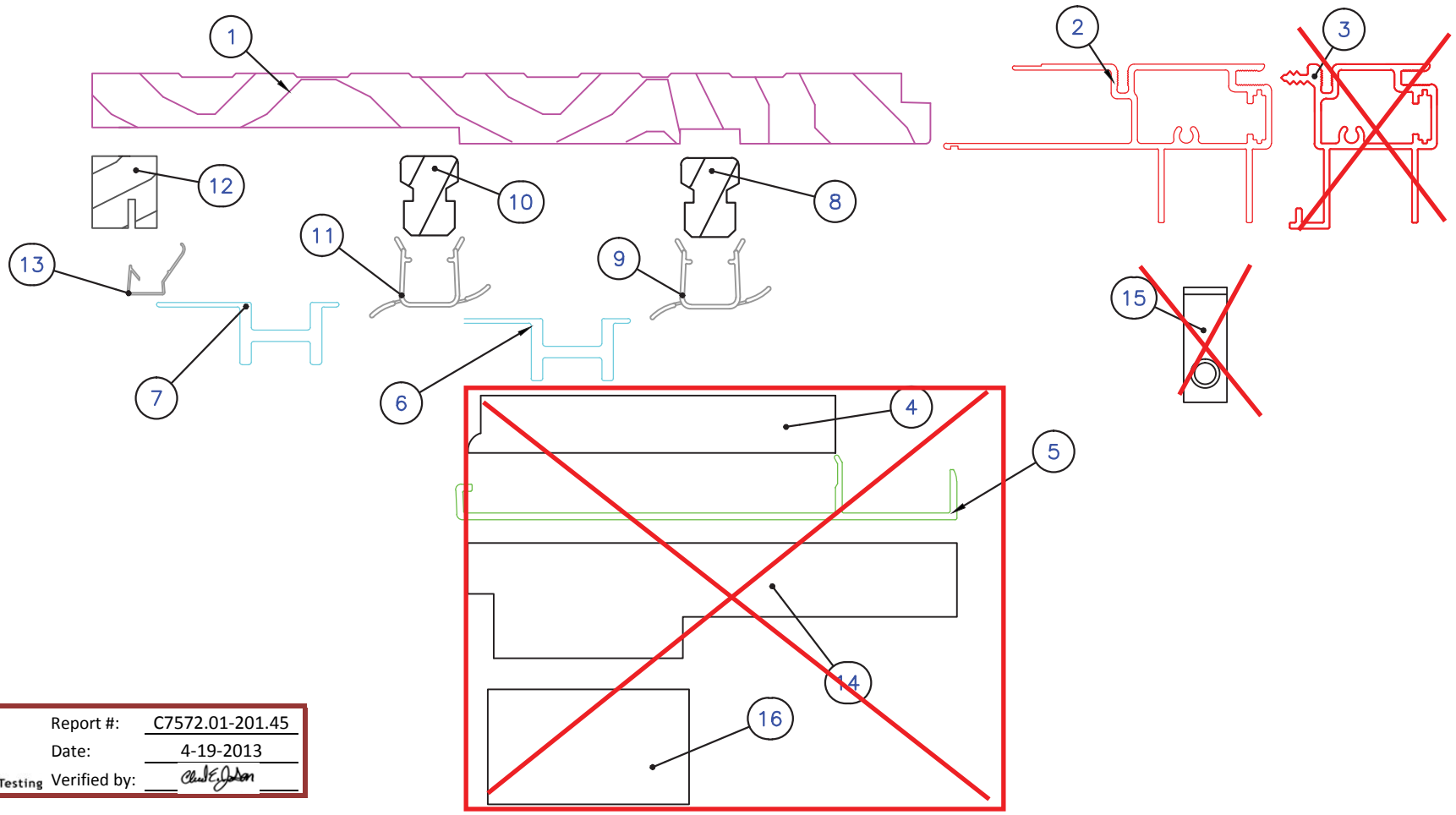

Architectural Testing

Report #: C7572.01-201.45
Date: 4-19-2013
Verified by:

Telescope Header

1	Wood header	9	Exterior U-Vinyl
2	Head Clad	10	Interior Parting Stop
3	~~Head Screen Clad~~	11	Interior U-Vinyl
4	~~Wood Stile Clad Filler~~	12	Inside Stop
5	~~Head Stile Clad~~	13	Inside Vinyl
6	Center Act. Stabilizer Bar	14	~~Center Act. Sash Stop~~
7	Interior Act. Stabilizer Bar	15	~~L Bracket Interior Screen Stop~~
8	Exterior Parting Stop	16	~~Mouse Pad for Part Number 14~~

Merrill Millwork
PARK-VUE
PATIO DOORS

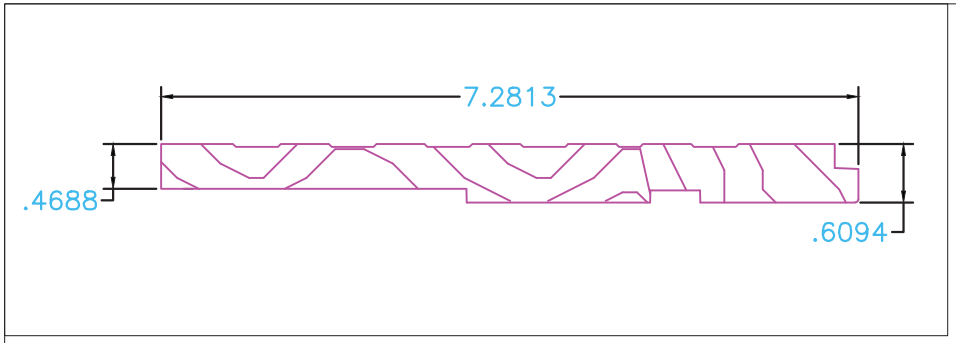

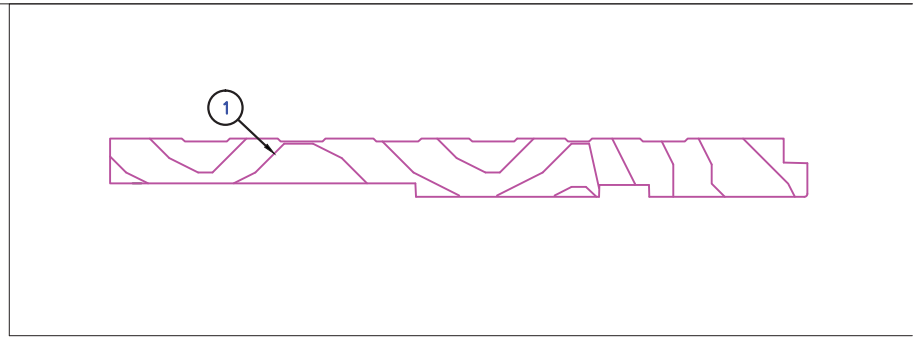

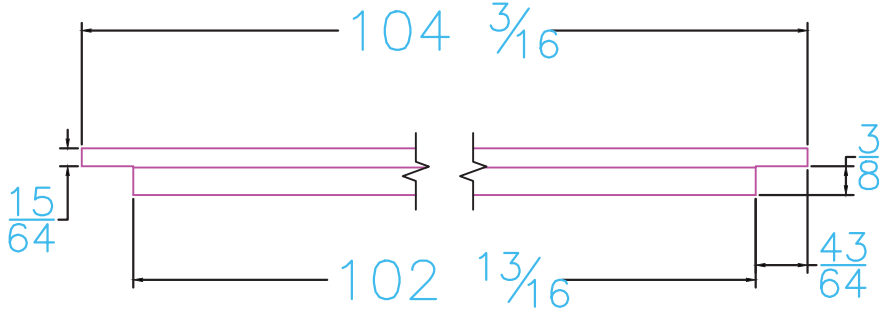

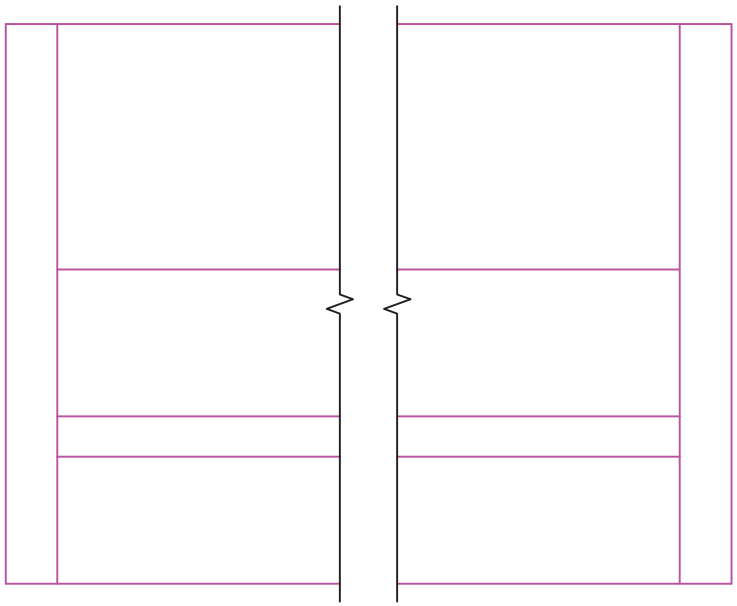

Merrill Millwork
PARK-VUE
PATIO DOORS

Architectural Testing

Report #: C7572.01-201.45
Date: 4-19-2013
Verified by:

Telescope Header

1	Wood header

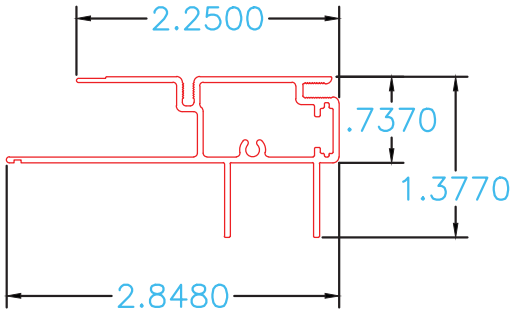

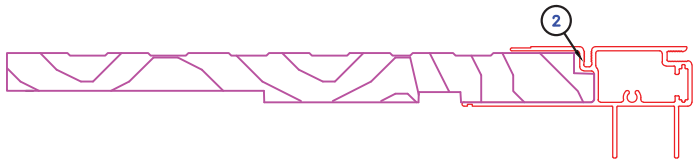

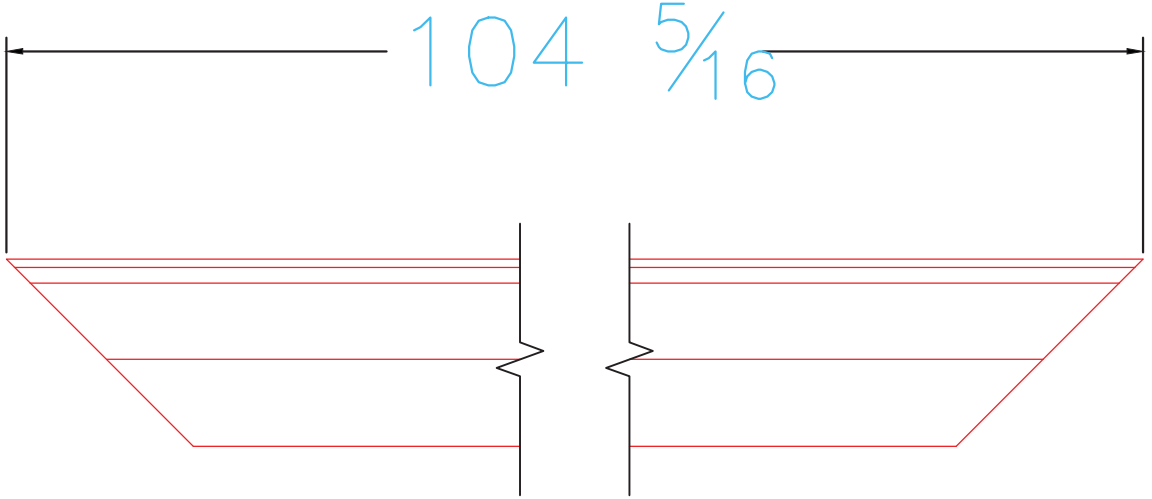

Merrill Millwork
PARK-VUE
PATIO DOORS

Architectural Testing
Report #: C7572.01-201.45
Date: 4-19-2013
Verified by:

Painted Aluminum

Telescope Header

2 | Head Clad

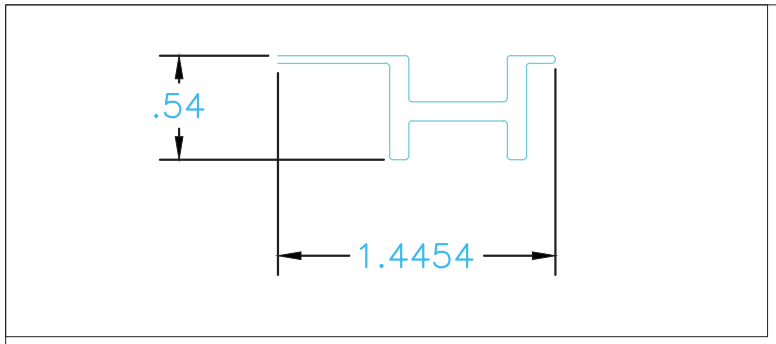

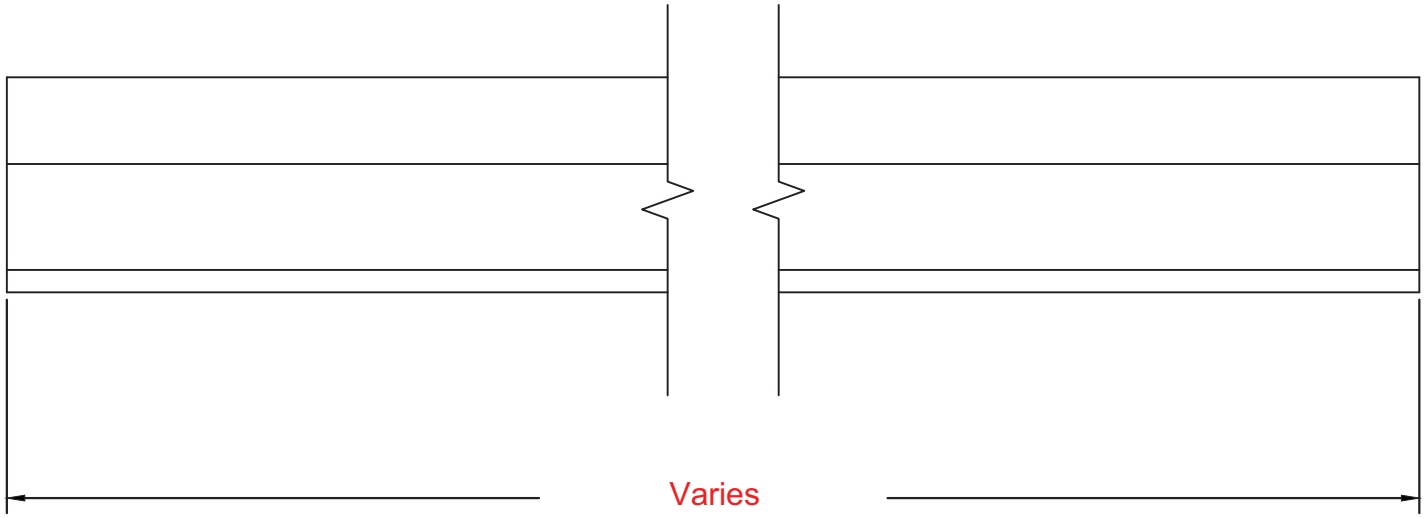

Merrill Millwork
PARK-VUE
PATIO DOORS

Architectural Testing
Report #: C7572.01-201.45
Date: 4-19-2013
Verified by:

Painted Aluminum

Telescope Header

6 Stabilizer Bar

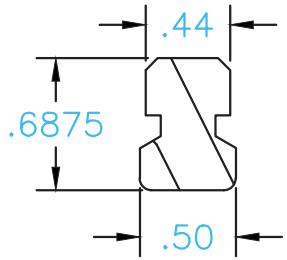

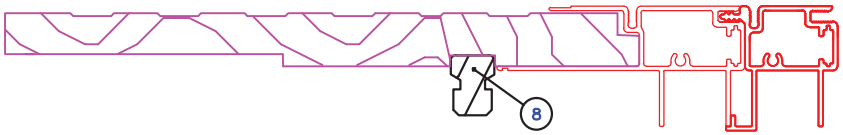

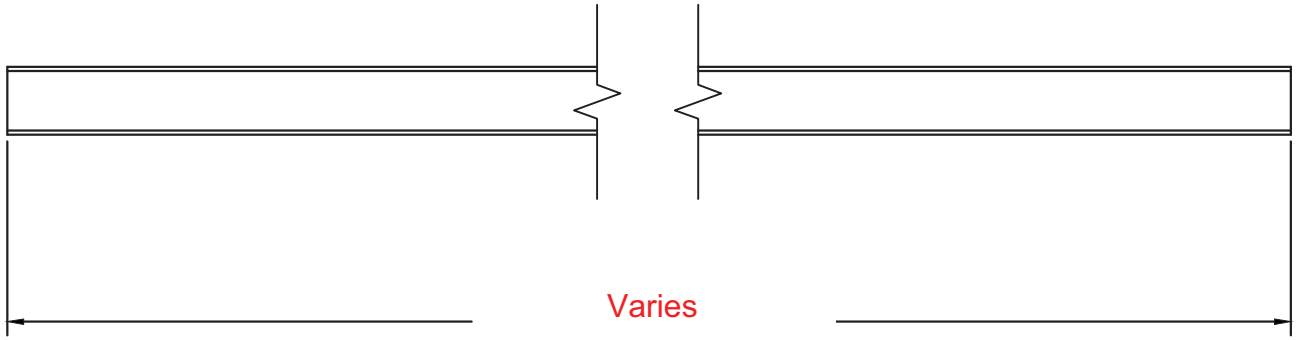

Merrill Millwork
PARK-VUE
PATIO DOORS

Architectural Testing
Report #: C7572.01-201.45
Date: 4-19-2013
Verified by:

Telescope Header

8 Parting Stop

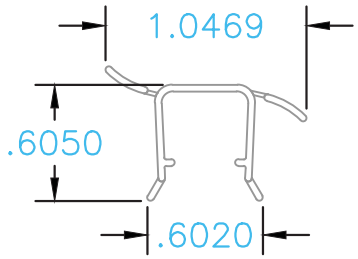

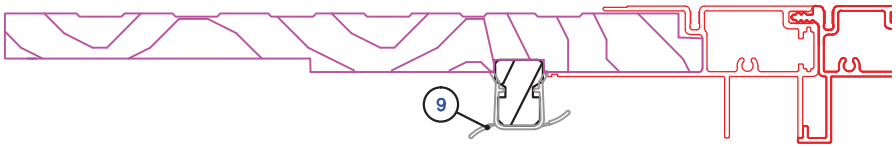

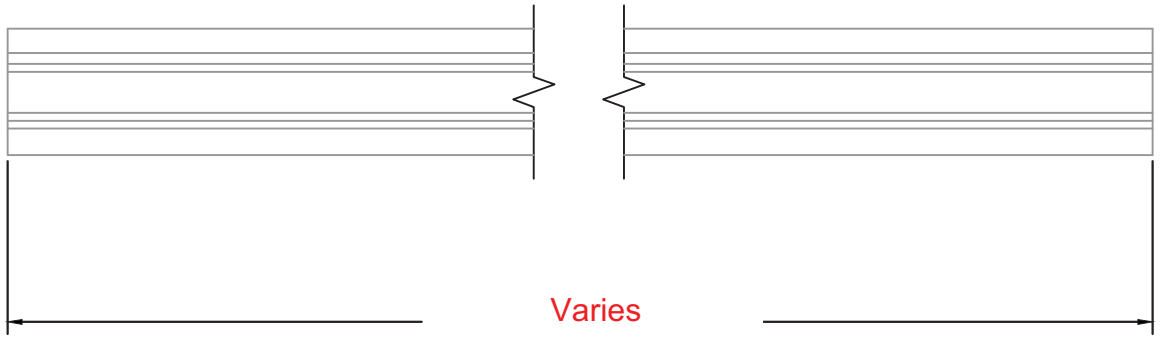

Merrill Millwork
PARK-VUE
PATIO DOORS

Architectural Testing

Report #: C7572.01-201.45
Date: 4-19-2013
Verified by:

Telescope Header

9 | Exterior U–Vinyl

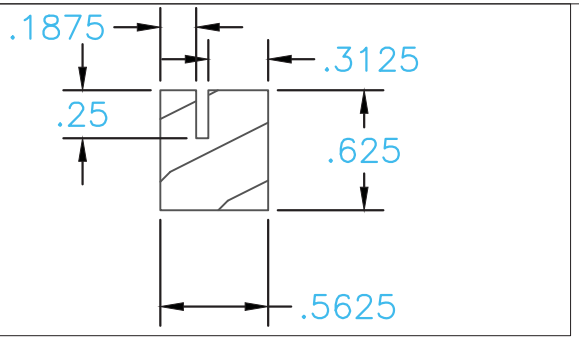

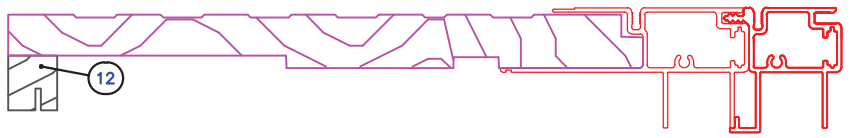

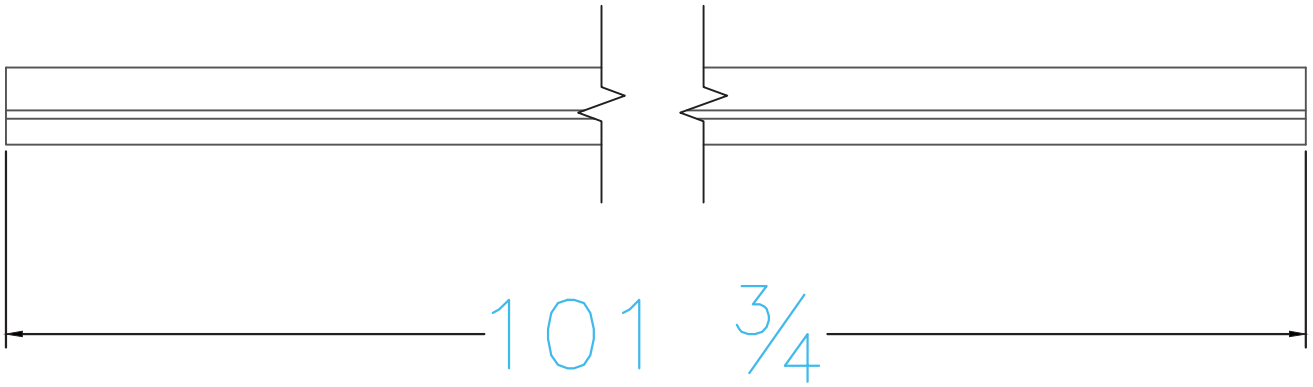

Merrill Millwork
PARK-VUE
PATIO DOORS

Architectural Testing
Report #: C7572.01-201.45
Date: 4-19-2013
Verified by:

Telescope Header

12 Inside Stop

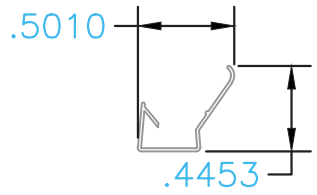

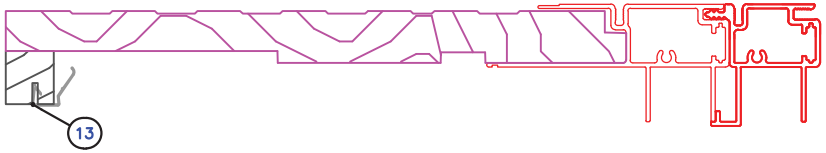

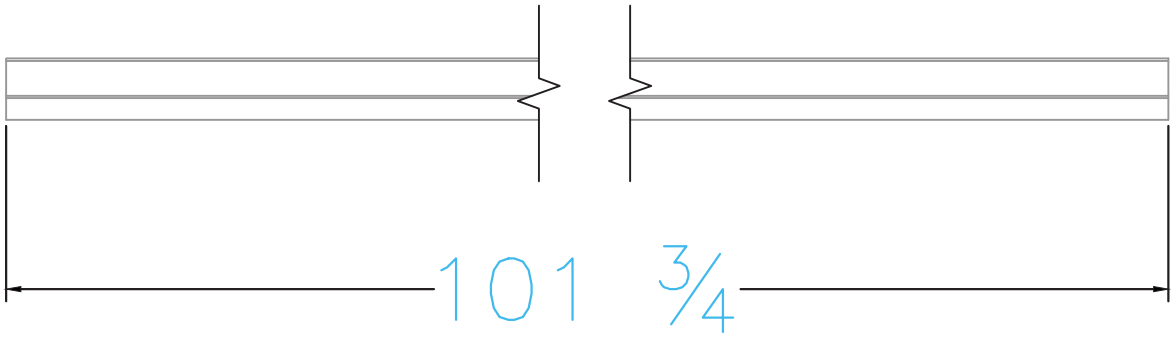

Merrill Millwork
PARK-VUE
PATIO DOORS

Architectural Testing

Report #: C7572.01-201.45
Date: 4-19-2013
Verified by:

Telescope Header

13 Inside Vinyl

Architectural Testing

Report #: C7572.01-201.45
Date: 4-19-2013
Verified by:

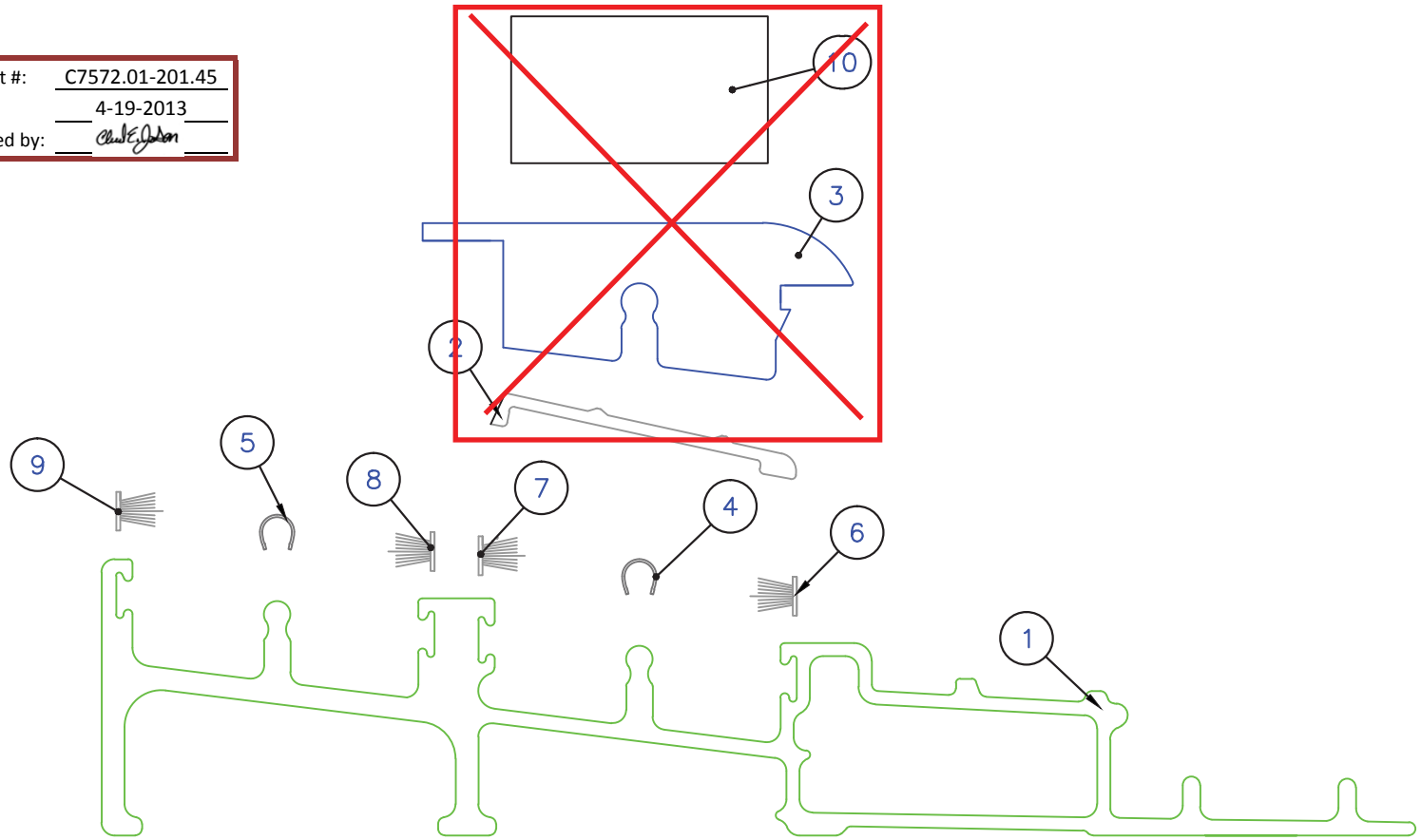

Telescope Sill

1	Fiber Glass Sill	9	Interior Interior Pile
2	~~ADA Piece Sill Filler~~	10	~~Mouse Pad~~
3	~~Anodized ADA Filler Clad Stop~~		
4	Center Roller Track		
5	Interior Roller Track		
6	Exterior Center Pile		
7	Interior Center Pile		
8	Exterior Interior Pile		

Merrill Millwork
PARK-VUE
PATIO DOORS

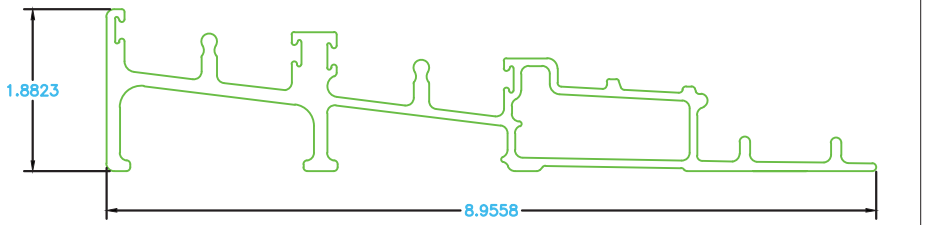

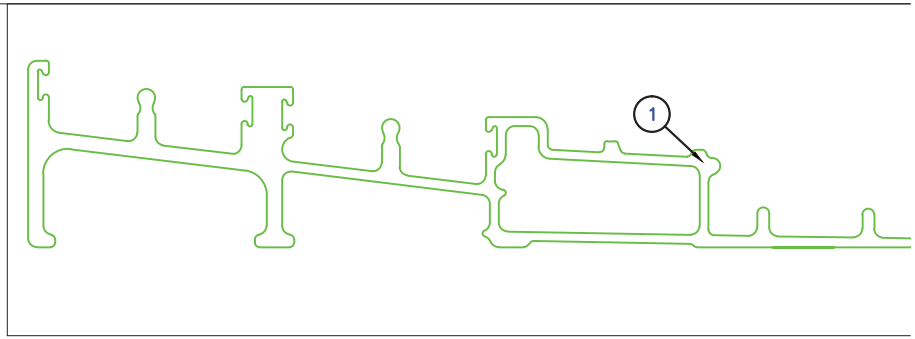

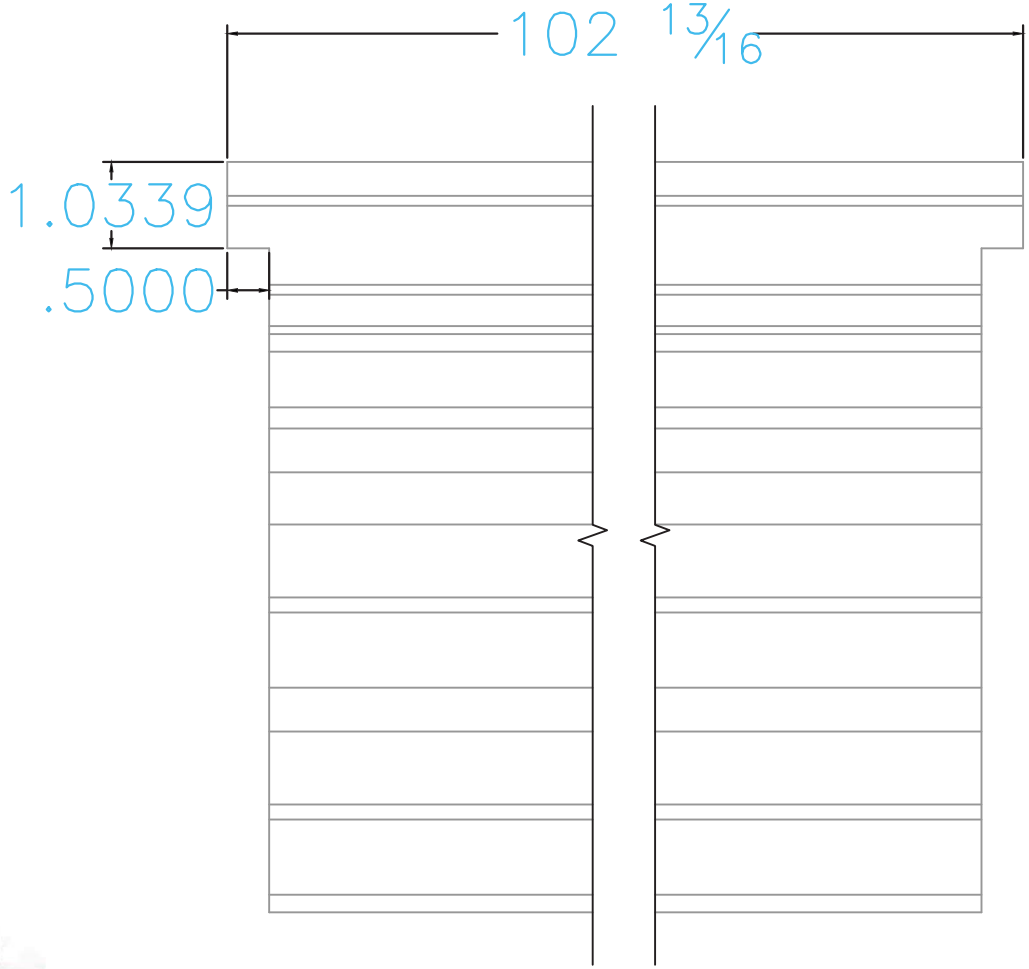

Merrill Millwork
PARK-VUE
PATIO DOORS

Architectural Testing

Report #: C7572.01-201.45
Date: 4-19-2013
Verified by:

Telescope Sill

1	Fiber Glass Sill

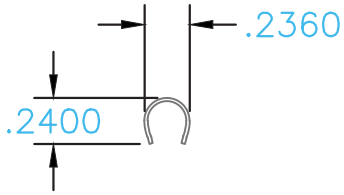

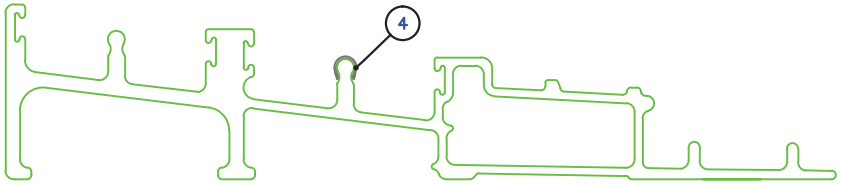

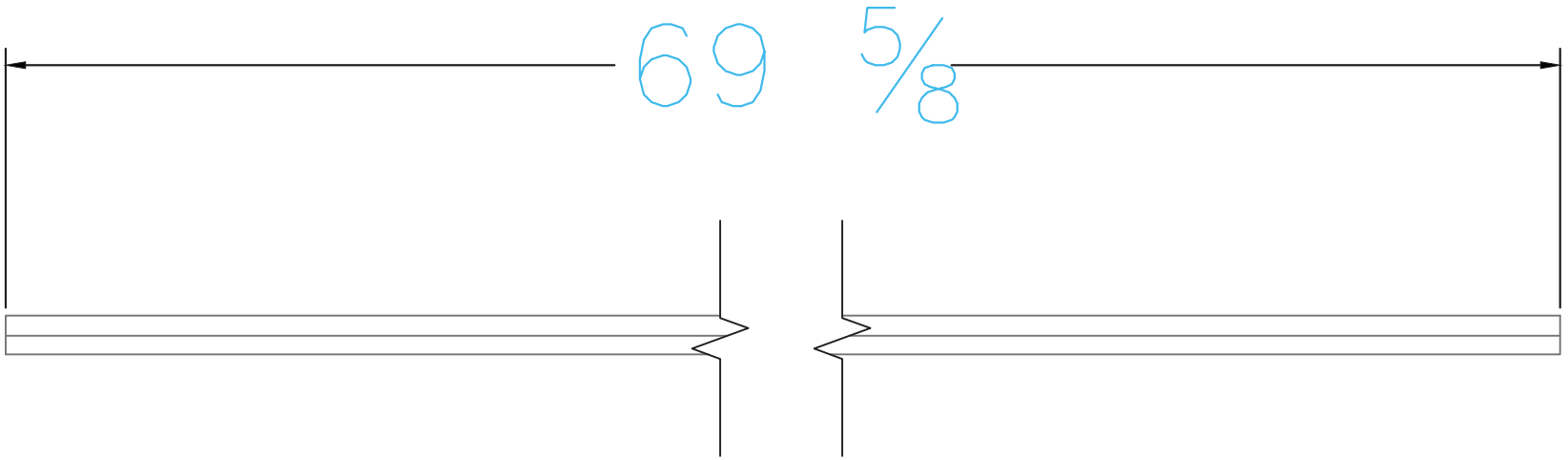

Merrill Millwork
PARK-VUE
PATIO DOORS

Architectural Testing
Report #: C7572.01-201.45
Date: 4-19-2013
Verified by:

Stainless Steel

Telescope Sill

4 | Center Roller Track

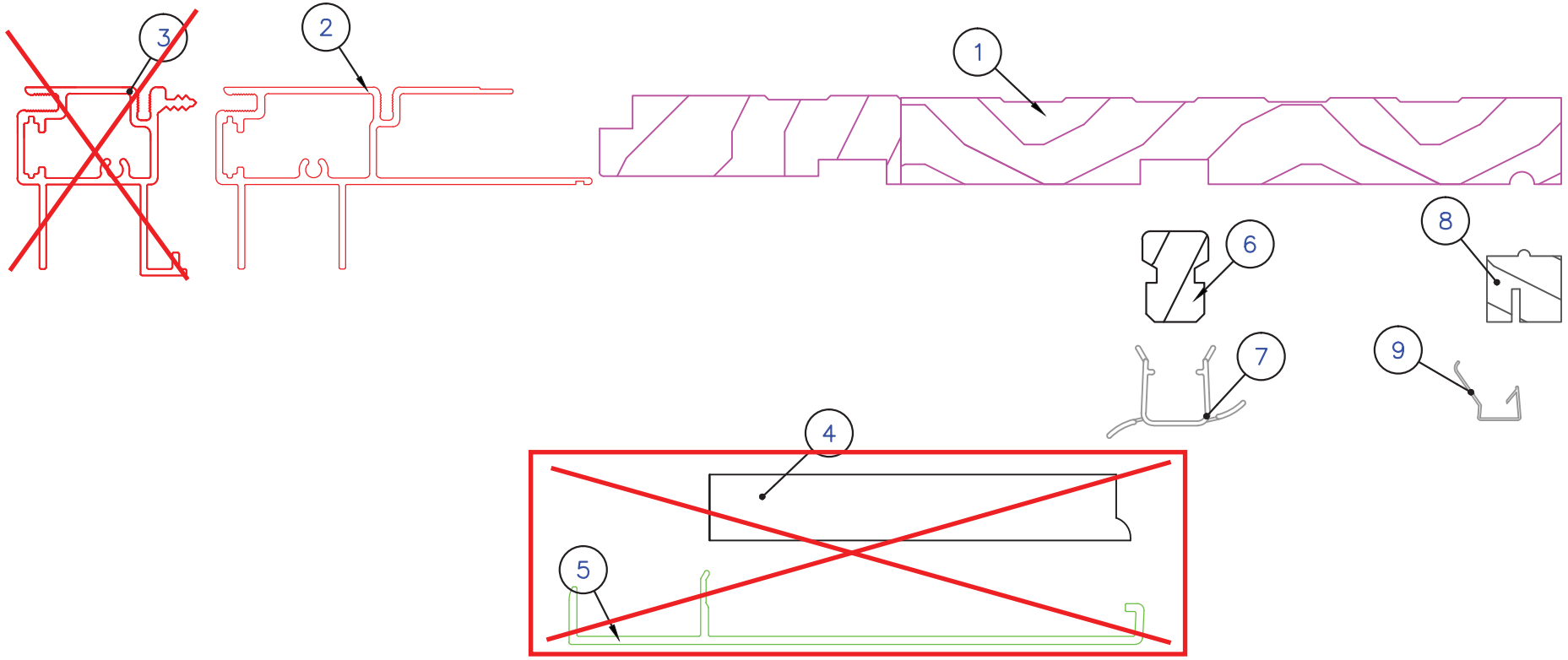

Architectural Testing

Report #: C7572.01-201.45
Date: 4-19-2013
Verified by:

Active Side Jamb

1	Wood Side Jamb	9	Side Inside Vinyl
2	Jamb Clad		
3	~~Jamb Screen Clad~~		
4	~~Jamb Stile Clad Filler~~		
5	~~Side Jamb Stile Clad~~		
6	Parting Stop		
7	U-Vinyl		
8	Side Inside Stop		

Merrill Millwork
PARK-VUE
PATIO DOORS

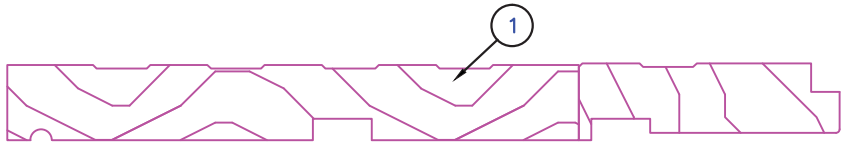

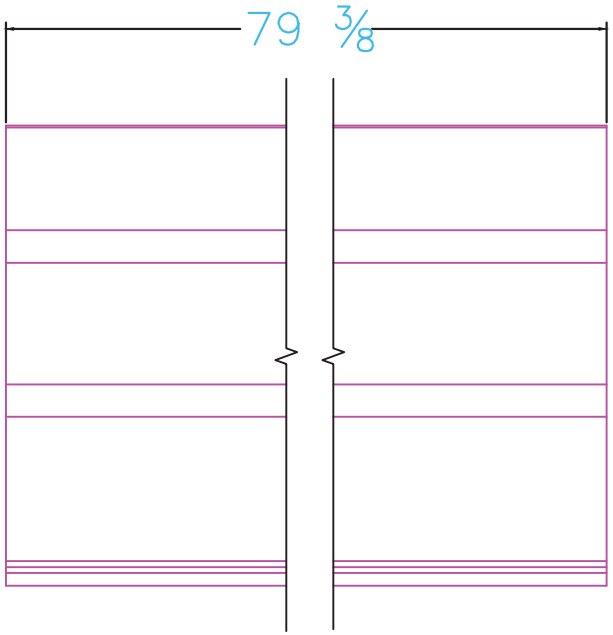

Merrill Millwork
PARK-VUE
PATIO DOORS

Architectural Testing

Report #: C7572.01-201.45
Date: 4-19-2013
Verified by:

Active Side Jamb

1 | Wood Side Jamb

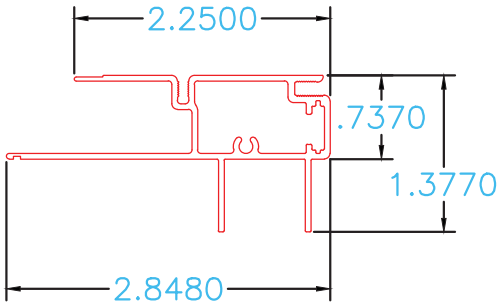

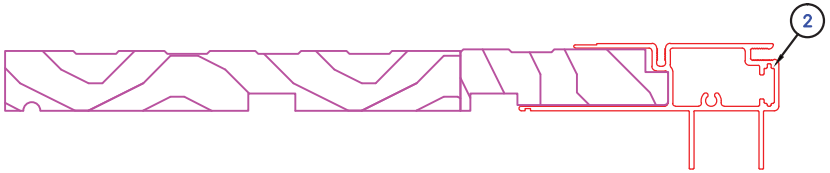

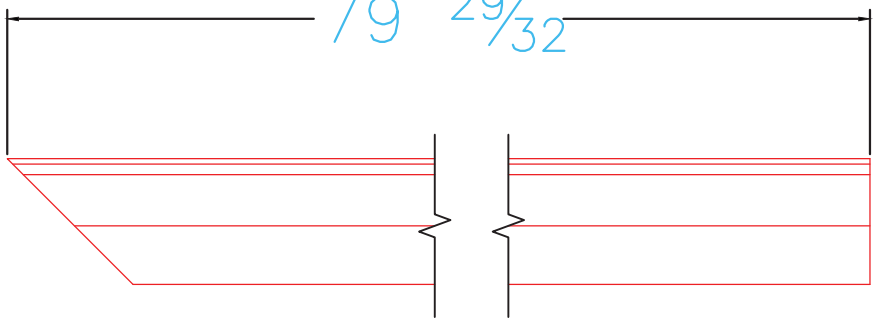

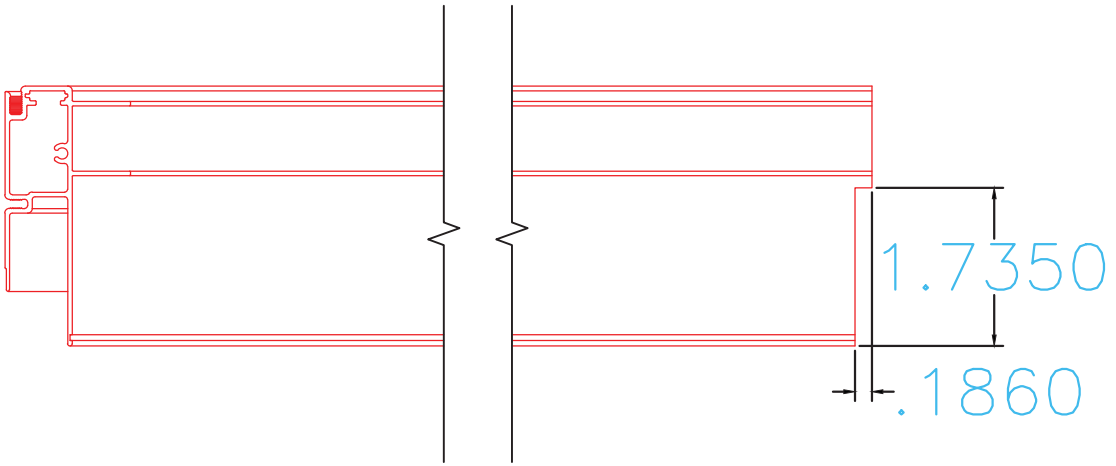

Merrill Millwork
PARK-VUE
PATIO DOORS

Architectural Testing

Report #: C7572.01-201.45
Date: 4-19-2013
Verified by: Chad E. Jordan

Painted Aluminum

Active Side Jamb

2 | Jamb Clad

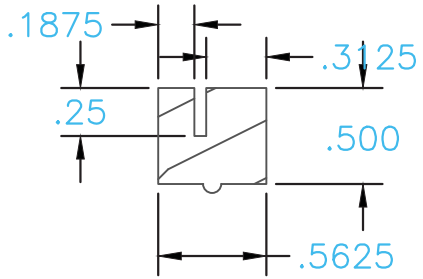

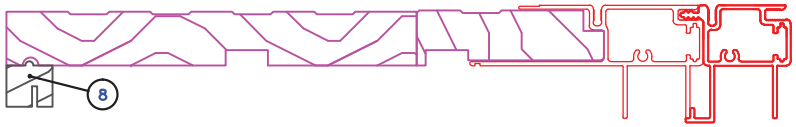

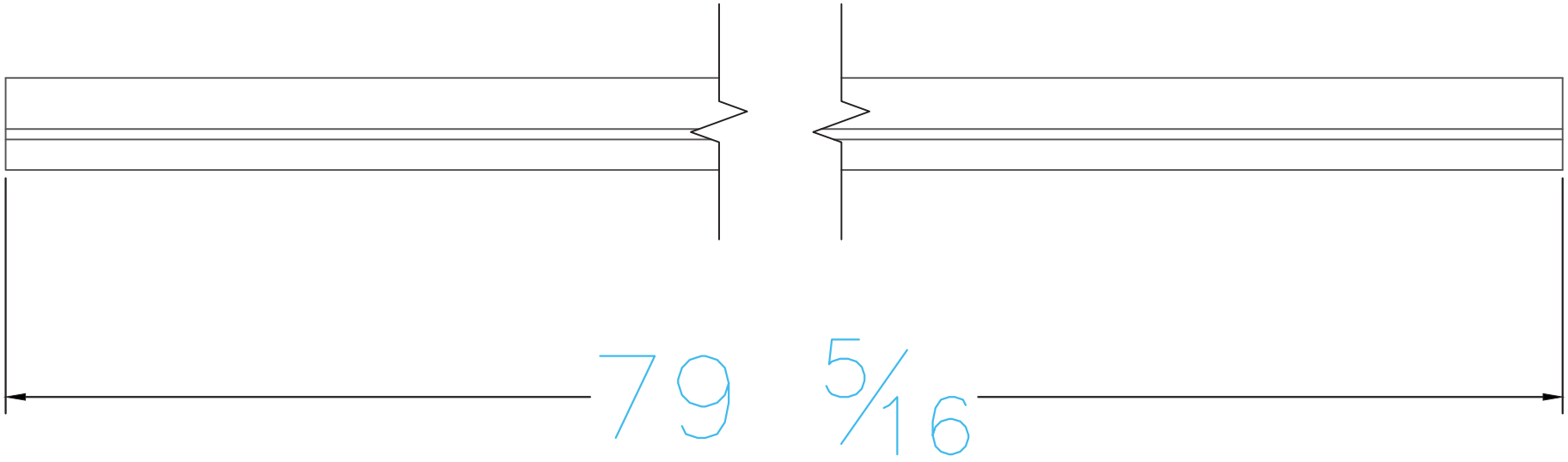

Merrill Millwork
PARK-VUE
PATIO DOORS

Architectural Testing

Report #: C7572.01-201.45
Date: 4-19-2013
Verified by:

Active Side Jamb

8 | Side Inside Stop

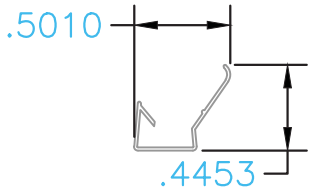

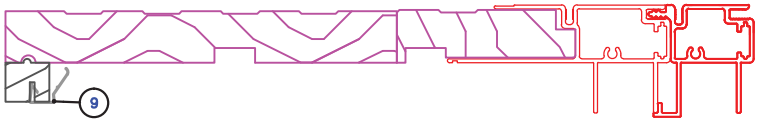

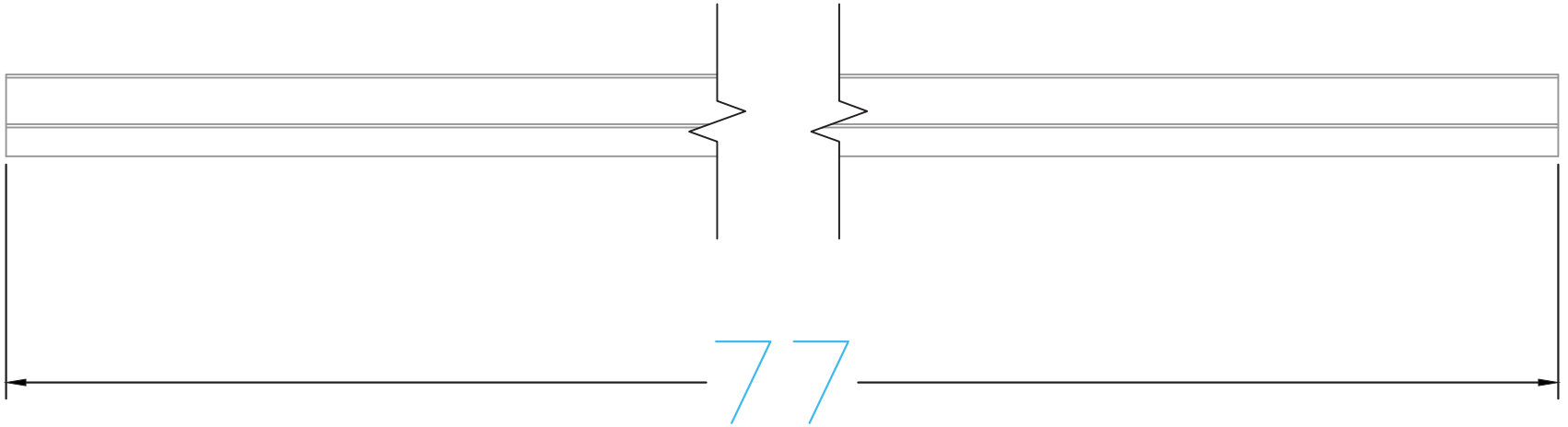

Merrill Millwork
PARK-VUE
PATIO DOORS

Architectural Testing
Report #: C7572.01-201.45
Date: 4-19-2013
Verified by:

Active Side Jamb

9 | Side Inside Vinyl

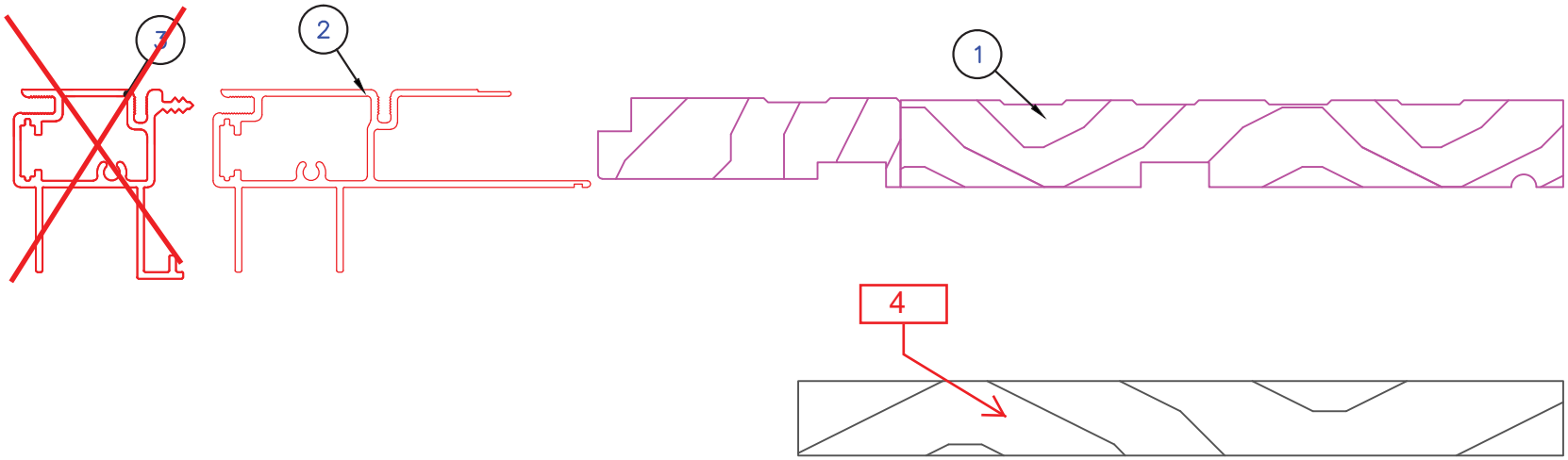

Architectural Testing

Report #: C7572.01-201.45
Date: 4-19-2013
Verified by:

Stat. Side Jamb

1	Wood Side Jamb		
2	Jamb Clad		
3	~~Jamb Screen Clad~~		
4	Stat. Jamb Stop		

Merrill Millwork
PARK-VUE
PATIO DOORS

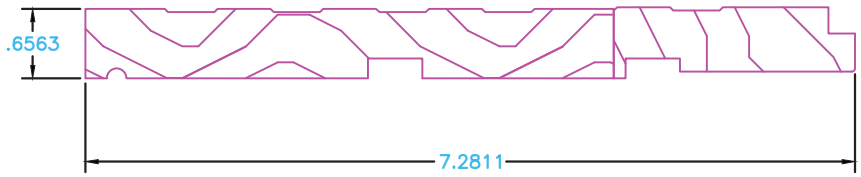

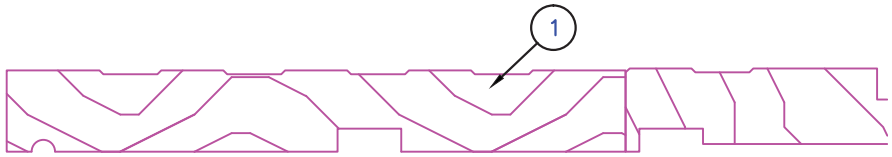

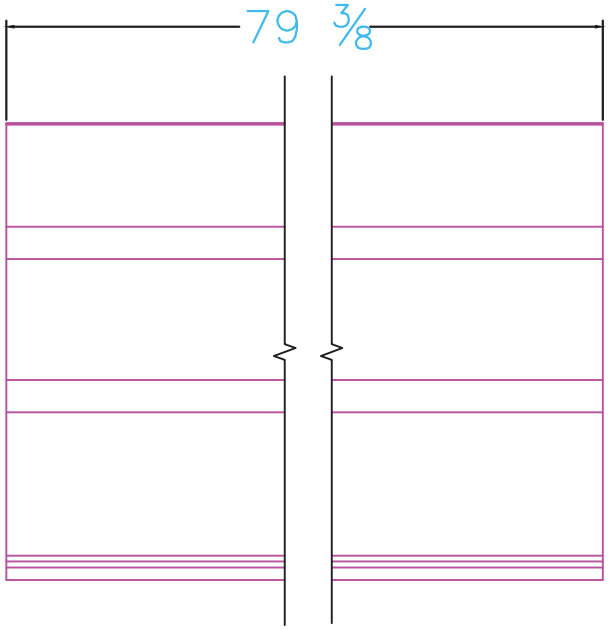

Merrill Millwork
PARK-VUE
PATIO DOORS

Architectural Testing

Report #: C7572.01-201.45
Date: 4-19-2013
Verified by:

Stat. Side Jamb

1	Wood Side Jamb

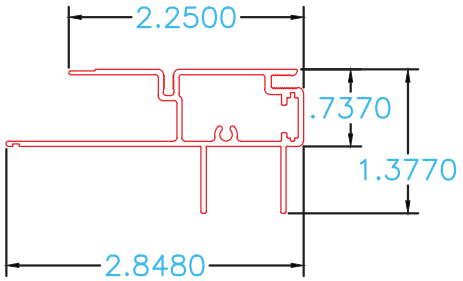

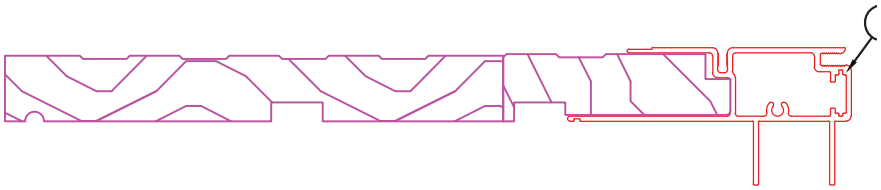

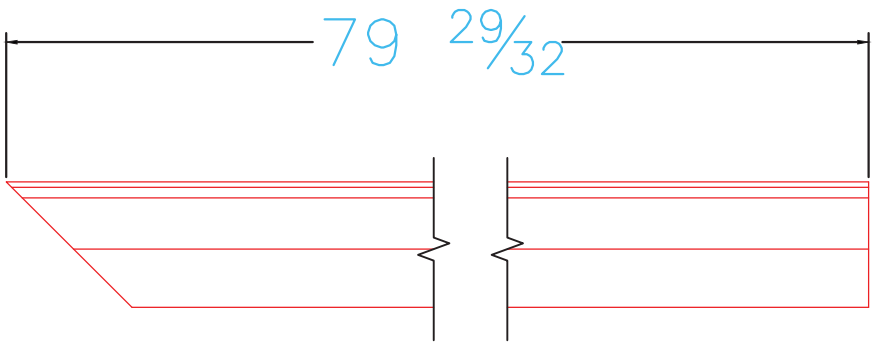

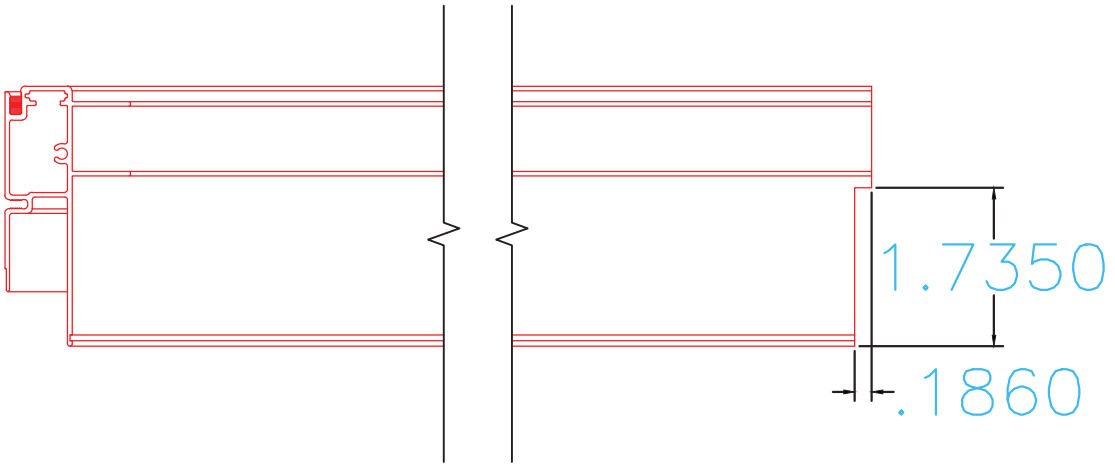

Merrill Millwork
PARK-VUE
PATIO DOORS

Architectural Testing
Report #: C7572.01-201.45
Date: 4-19-2013
Verified by:

Painted Aluminum

Stat. Side Jamb

2 | Jamb Clad

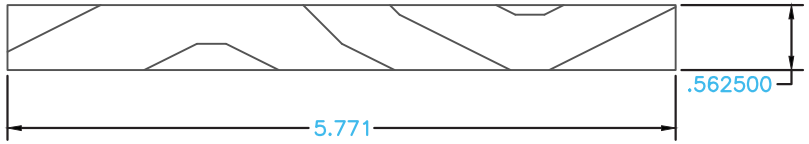

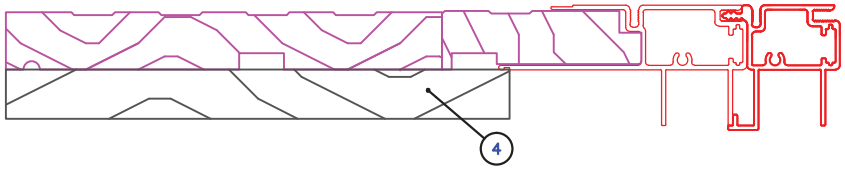

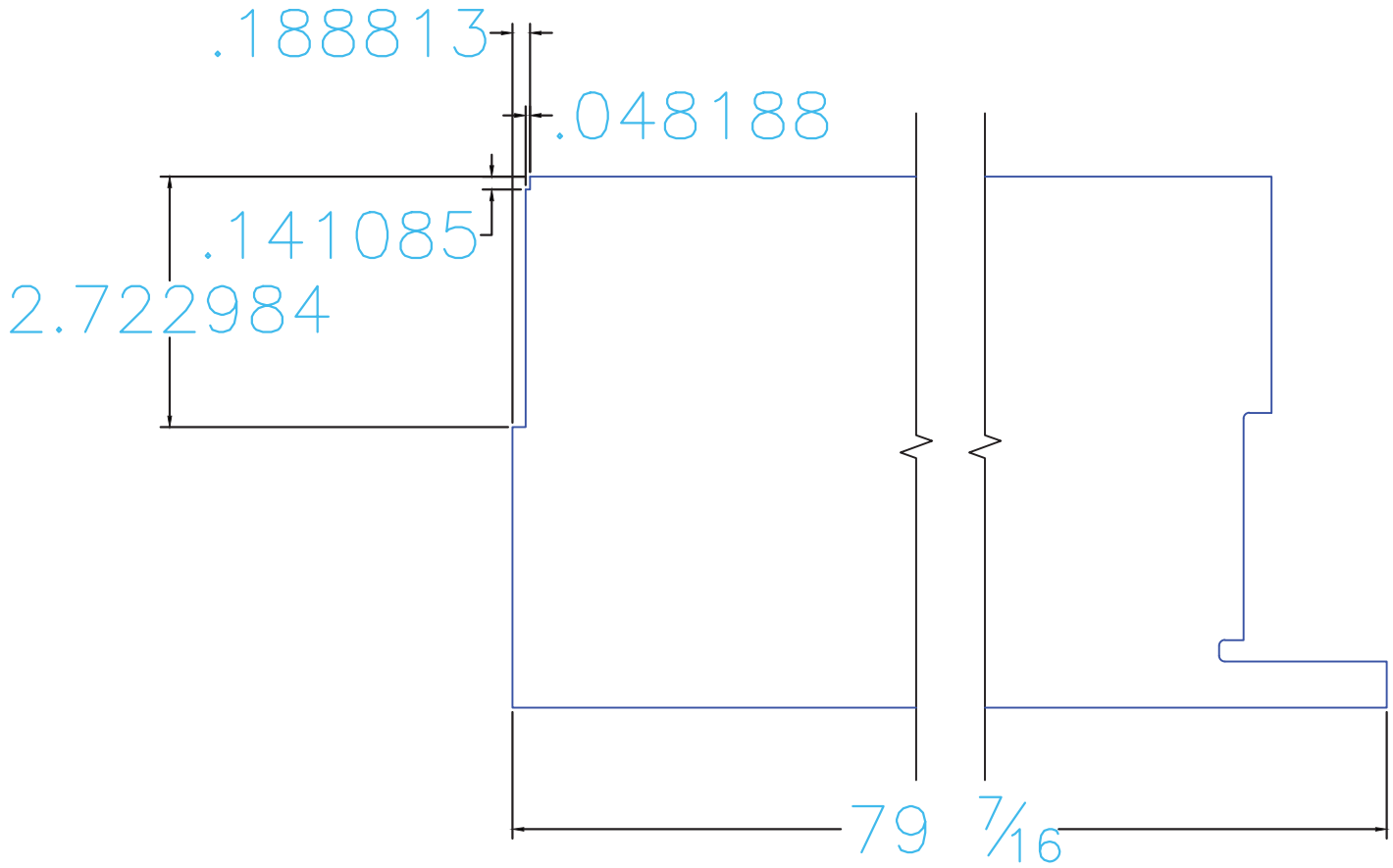

Merrill Millwork
PARK-VUE
PATIO DOORS

Architectural Testing

Report #: C7572.01-201.45
Date: 4-19-2013
Verified by:

Stat. Side Jamb

4 | Stat. Jamb Stop

Clad Slide interlock Stile

6/6	78.000
6/8	80.000
8/0	93.000

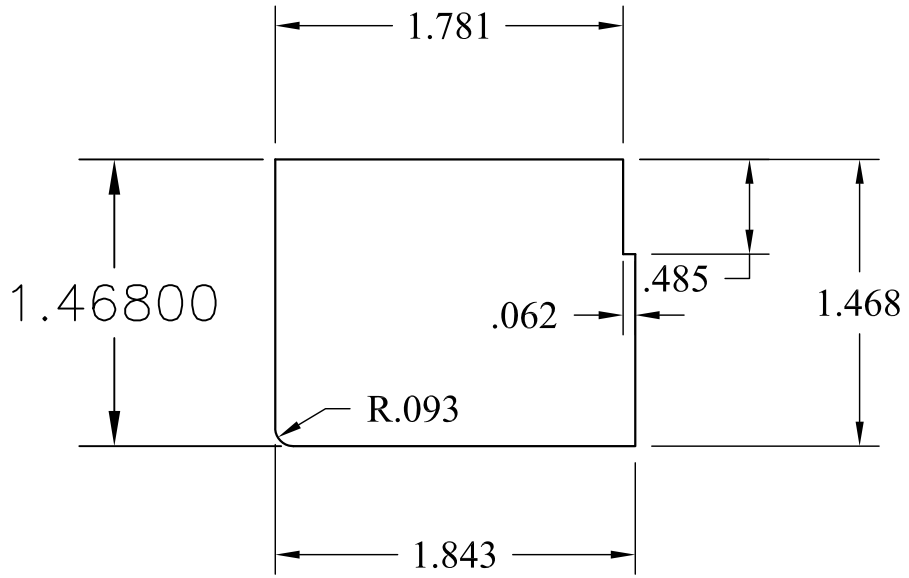

DATE:		BY

MY SIGNATURE ON THIS PRINT INDICATES MY APPROVAL OF DESIGN AND DIMENSIONS AS SHOWN AND I AUTHORIZE PRODUCTION OF SAME. DELIVERY DATE WILL NOT BE ASSIGNED UNTIL AUTHORIZED WRITTEN APPROVAL IS RECEIVED.

CUSTOMER _____

BY _____

DATE _____

panel width adj for calc
1.843=1.84375

DETAIL:

DATE:

SCALE: FULL

Parrett Windows & Doors
Quality Crafted Specialty Millwork
PARRETT MFG., INC. 810 2nd Ave. East
P.O. Box 440, Dorchester, WI 54425
Phone (715)654-6444 FAX (715)654-6555

DR BY:

CK'D BY:

REF. NO.

DWG. NO. C1

Architectural Testing

Report #: C7572.01-201.45

Date: 4-19-2013

Verified by:

Clad Slide Act. Stile Lock side

6/6	78.000
6/8	80.000
8/0	93.000

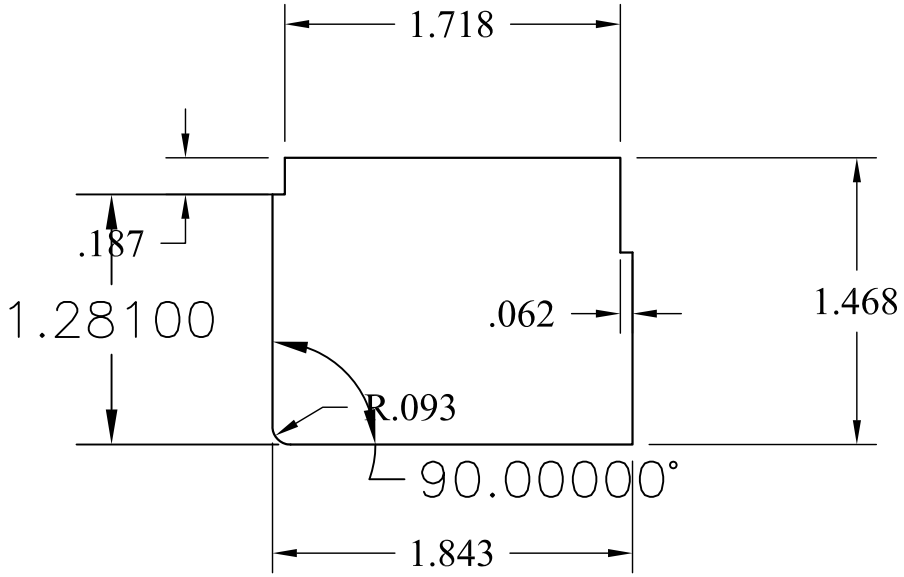

DATE:		BY

MY SIGNATURE ON THIS PRINT INDICATES MY APPROVAL OF DESIGN AND DIMENSIONS AS SHOWN AND I AUTHORIZE PRODUCTION OF SAME. DELIVERY DATE WILL NOT BE ASSIGNED UNTIL AUTHORIZED WRITTEN APPROVAL IS RECEIVED.

CUSTOMER _____

BY _____

DATE _____

panel width adj for calc
1.843=1.84375

DETAIL:

DATE:

SCALE: FULL

Parrett Windows & Doors
Quality Crafted Specialty Millwork
PARRETT MFG., INC. 810 2nd Ave. East
P.O. Box 440, Dorchester, WI 54425
Phone (715)654-6444 FAX (715)654-6555

DR BY:

CK'D BY:

REF. NO.

DWG. NO. C2

Architectural Testing

Report #: C7572.01-201.45

Date: 4-19-2013

Verified by:

Clad Slide stationary Stile

6/6	78.000
6/8	80.000
8/0	93.000

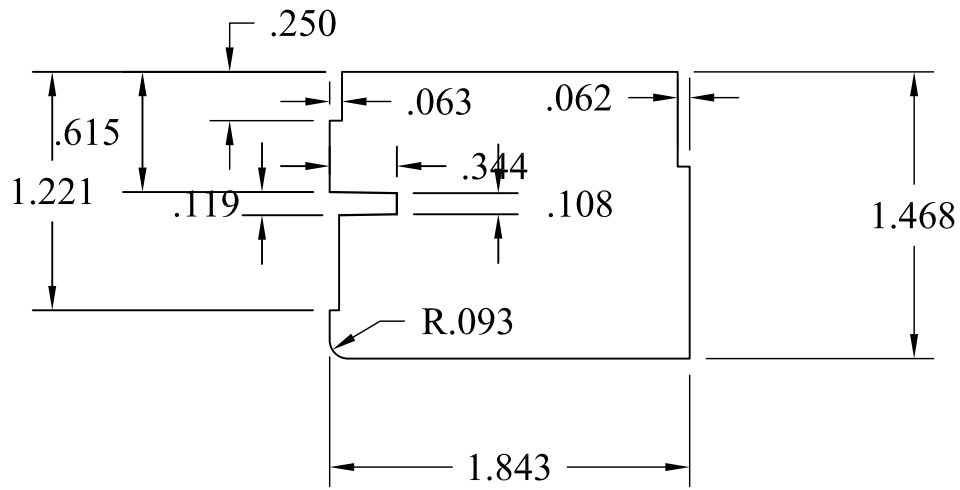

12/7/12	Revised kerf to .119	RE
11/8/12	Revised for bracket	RE
4/03	Revised Outside Kerf	JZ
DATE:		BY

MY SIGNATURE ON THIS PRINT INDICATES MY APPROVAL OF DESIGN AND DIMENSIONS AS SHOWN AND I AUTHORIZE PRODUCTION OF SAME. DELIVERY DATE WILL NOT BE ASSIGNED UNTIL AUTHORIZED WRITTEN APPROVAL IS RECEIVED.

CUSTOMER _____

BY _____

DATE _____

panel width adj for calc
1.843=1.84375

DETAIL:

DATE:

SCALE: FULL

Parrett Windows & Doors
Quality Crafted Specialty Millwork
PARRETT MFG., INC. 810 2nd Ave. East
P.O. Box 440, Dorchester, WI 54425
Phone (715)654-6444 FAX (715)654-6555

DR BY:

CK'D BY:

REF. NO.

DWG. NO. C3

Architectural Testing

Report #: C7572.01-201.45

Date: 4-19-2013

Verified by:

Clad Slide Act. Rail

Parrett rail cut length
width − 1.3125 =

2-6	28.625
2-9	31.625
3-0	34.625
3-3	37.625
4-0	46.625
4-3	49.625

Part #	CP	SASH WIDTH	SASH HEIGHT
SACP2100011	active sash CP Special Size Pine One Point	TBA	TBA
SACP2150A11	active sash CP2/6 x 6/6 Pine One Point	29-15/16	78
SACP2160A11	active sash CP3/0 X 6/6 Pine One Point	35-15/16	78
SACP2180A11	active sash CP4/0 X 6/6 Pine One Point	47-15/16	78
SACP2156B11	active sash CP2/9 X 6/8 Pine One Point	32-15/16	80
SACP2166B11	active sash CP3/3 X 6/8 Pine One Point	38-15/16	80
SACP2186B11	active sash CP4/3 X 6/8 Pine One Point	50-15/16	80
SACP2150C11	active sash CP2/6 x 8/0 Pine One Point	29-15/16	93
SACP2160C11	active sash CP3/0 x 8/0 Pine One Point	35-15/16	93
SACP2180C11	active sash CP4/0 x 8/0 Pine One Point	47-15/16	93

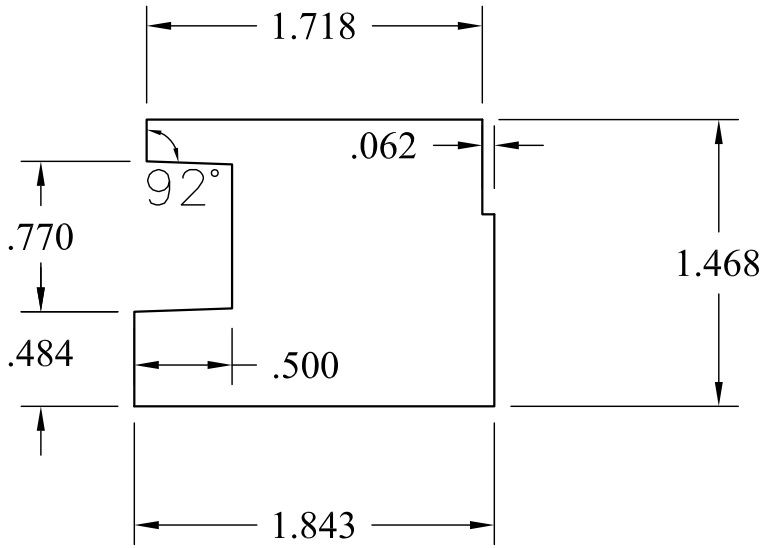

DATE:		BY

MY SIGNATURE ON THIS PRINT INDICATES MY APPROVAL OF DESIGN AND DIMENSIONS AS SHOWN AND I AUTHORIZE PRODUCTION OF SAME. DELIVERY DATE WILL NOT BE ASSIGNED UNTIL AUTHORIZED WRITTEN APPROVAL IS RECEIVED.

CUSTOMER _____

BY _____

DATE _____

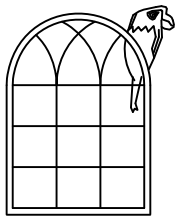

DETAIL:

DATE:

SCALE: FULL

Parrett Windows & Doors
Quality Crafted Specialty Millwork
PARRETT MFG., INC. 810 2nd Ave. East
P.O. Box 440, Dorchester, WI 54425
Phone (715)654-6444 FAX (715)654-6555

DR BY:

CK'D BY:

REF. NO.

DWG. NO. C4

Architectural Testing

Report #: C7572.01-201.45

Date: 4-19-2013

Verified by:

Clad Slide Stat. Rail

Parrett rail cut length
width – 1.3125 =

2–6	28.625
2–9	31.625
3–0	34.625
3–3	37.625
4–0	46.625
4–3	49.625

Part #	CP	SASH WIDTH	SASH HEIGHT
SACP220001	stat sash CP Special Size Pine	TBA	TBA
SACP2250A1	stat sash CP2/6 X 6/6 Pine	29-15/16	78
SACP2260A1	stat sash CP3/0 X 6/6 Pine	35-15/16	78
SACP2280A1	stat sash CP4/0 X 6/6 Pine	47-15/16	78
SACP2256B1	stat sash CP2/9 X 6/8 Pine	32-15/16	80
SACP2266B1	stat sash CP3/3 X 6/8 Pine	38-15/16	80
SACP2286B1	stat sash CP4/3 X 6/8 Pine	50-15/16	80
SACP2250C1	stat sash CP2/6 x 8/0 Pine	29-15/16	93
SACP2260C1	stat sash CP3/0 x 8/0 Pine	35-15/16	93
SACP2280C1	stat sash CP4/0 x 8/0 Pine	47-15/16	93

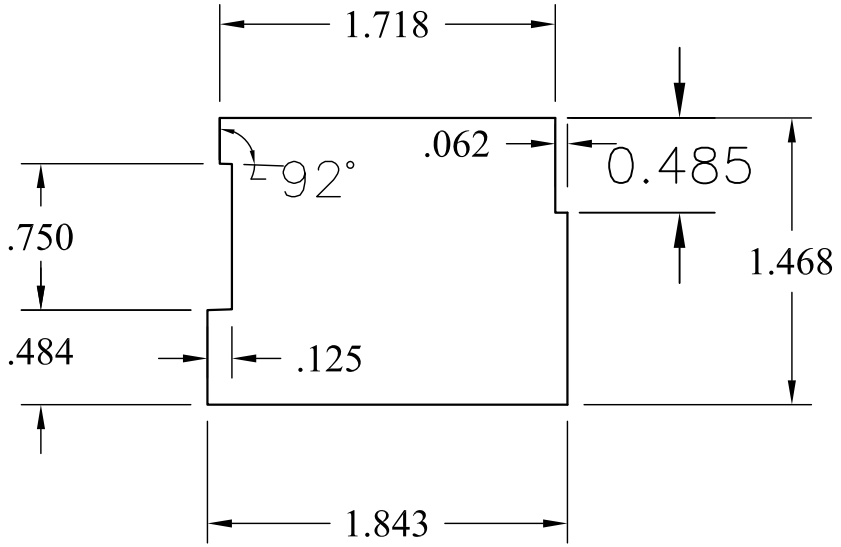

DATE:		BY

Architectural Testing
Report #: C7572.01-201.45
Date: 4-19-2013
Verified by:

MY SIGNATURE ON THIS PRINT INDICATES MY APPROVAL OF DESIGN AND DIMENSIONS AS SHOWN AND I AUTHORIZE PRODUCTION OF SAME. DELIVERY DATE WILL NOT BE ASSIGNED UNTIL AUTHORIZED WRITTEN APPROVAL IS RECEIVED.

CUSTOMER _____

BY _____

DATE _____

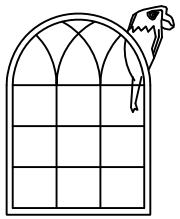

DETAIL:

DATE:

SCALE: FULL

Parrett Windows & Doors
Quality Crafted Specialty Millwork
PARRETT MFG., INC. 810 2nd Ave. East
P.O. Box 440, Dorchester, WI 54425
Phone (715)654-6444 FAX (715)654-6555

DR BY:

CK'D BY:

REF. NO.

DWG. NO. C5

Wood Glazing Bead

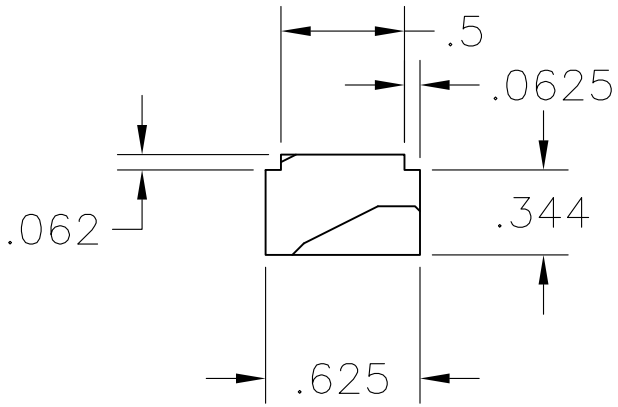

Architectural Testing

Report #: C7572.01-201.45
Date: 4-19-2013
Verified by:

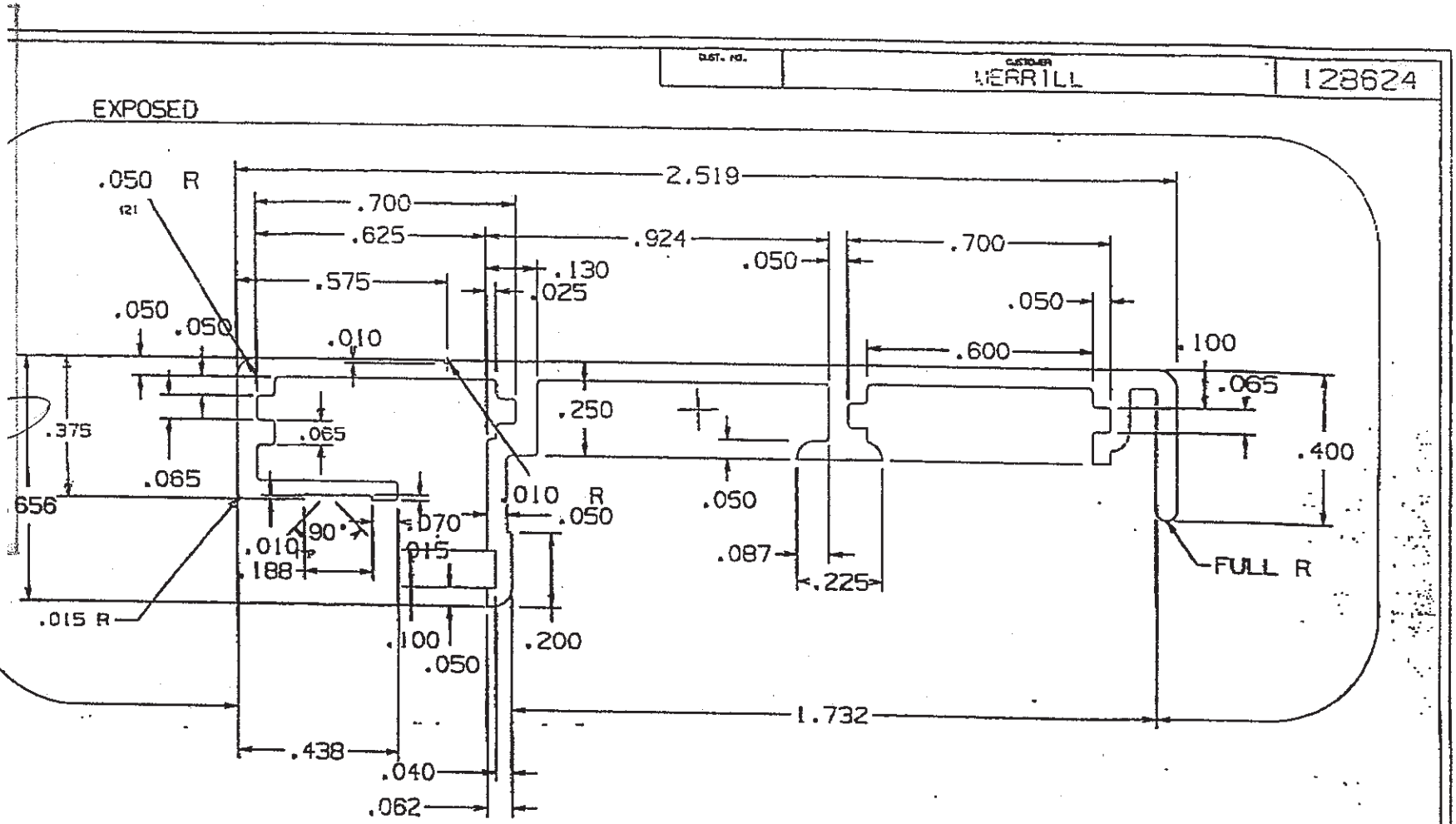

Painted Aluminum

2. ALL CORNERS 0.010 R UNLESS OTHERWISE SPECIFIED.
1. TYP WALL THICKNESS 0.050 UNLESS OTHERWISE SPECIFIED.
NOTES: 7X18

ECO	REV	REVISION RECORD	DATE	DFT.	CHK
-----	C	U.G. .375 WAS .250	10/03/97	KEK	
-----	B	ADD DIM'S	10/03/97	KEK	KV
-----	A	RELEASE	9/29/97	KEK	KH

ALL DIMENSIONS IN INCHES	TOLERANCES UNLESS OTHERWISE SPECIFIED	ANGULAR ±1°	DFT. M. KEARNS
ALLOY 6063-T5	EST. WEIGHT 0.306	.000 TO .125 ± .009	1.001 TO 2.000 ± .0175
DIE SIZE 9" 2 PORT	EST. PERIM. 9.79	.126 TO .500 ± .010	2.001 TO 3.001 ± .025
EXTR. LENGTH 7X26'303 8X26'393	FACTOR 21.7	.501 TO 1.000 ± .015	3.001 TO 4.000 ± .025

PROJECTION: REAR KEK
APPL. KEK
DATE 9/29/97

SCALE XX
TITLE EXTR-CP SASH CLAD
DIE NO. 128624

CAPCO
Crawford Aluminum Products Company
A DIVISION OF TENNECO INDUSTRIES, INC.

THIS IS NOT A TENNECO DESIGN. IT IS TENNECO'S INTERPRETATION OF THE SECTION DESIGNED AND REQUESTED BY ITS CUSTOMER. CUSTOMER SHOULD THOROUGHLY CHECK THE DRAWING AND TEST THE SECTION BEFORE USING AS TENNECO ACCEPTS NO RESPONSIBILITY OR LIABILITY FOR THE PERFORMANCE OF PRODUCTS PRODUCED THEREFROM. TENNECO MAKES NO WARRANTY OF FITNESS FOR A PARTICULAR PURPOSE WITH REGARD TO THE EXTRUSIONS PRODUCED PURSUANT TO THIS DRAWING. TENNECO'S ONLY WARRANTY SHALL BE AS STATED ON TENNECO'S SALES ORDER ACKNOWLEDGEMENT FORM.

DESIGN APPROVAL

Please indicate your approval of this design by signing be

Date

Company

By

Architectural Testing

Report #: C7572.01-201.45

Date: 4-19-2013

Verified by:

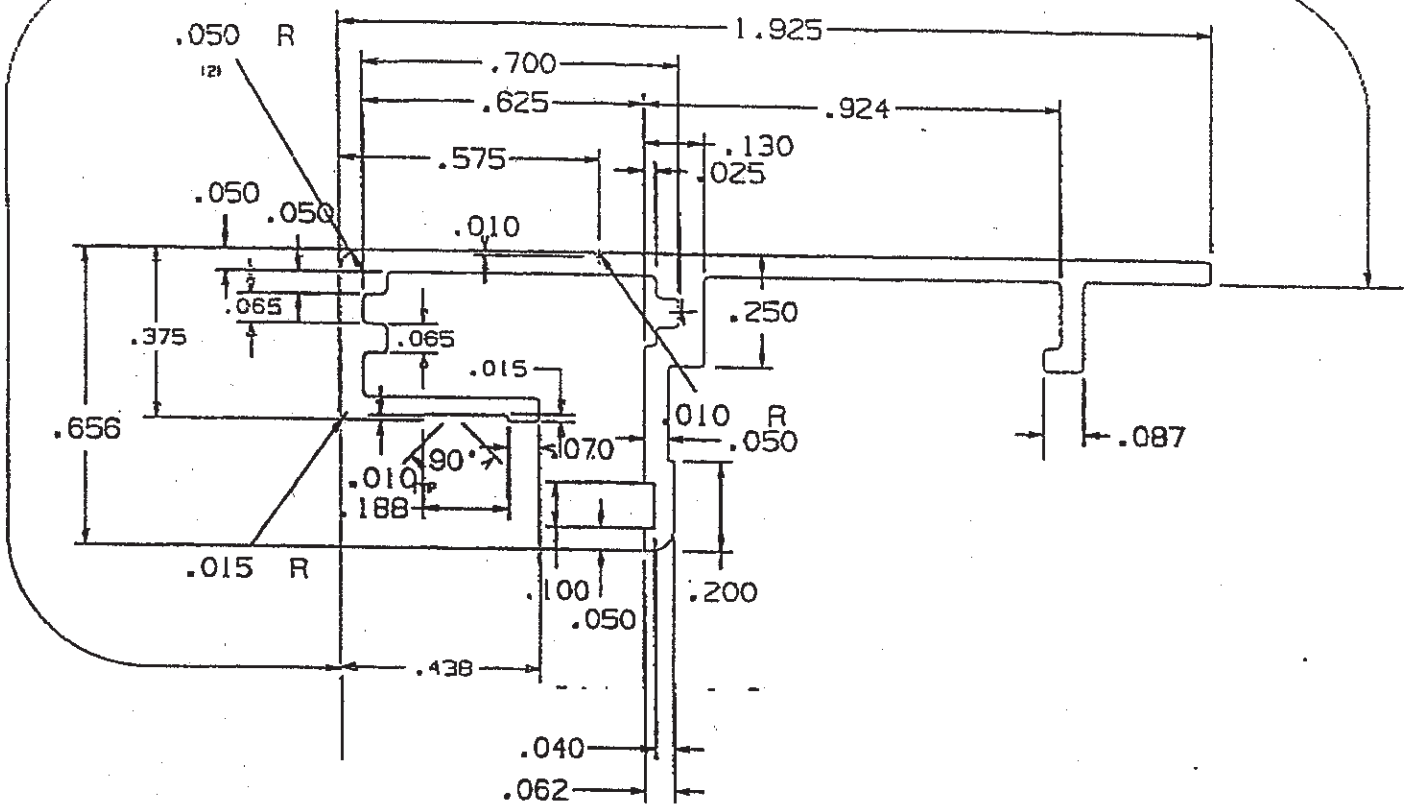

CUST. NO.	CUSTOMER MERRILL	128954

2. ALL CORNERS 0.010 R UNLESS OTHERWISE SPECIFIED.
1. TYP WALL THICKNESS 0.050 UNLESS OTHERWISE SPECIFIED.
NOTES: 7X26

ECO	REV	REVISION RECORD	DATE	DFT.	CHK
	D	U.G. .375 WAS .250	09/05/02	KEK	
	C	1.925 WAS 1.737	02/13/98	KEK	
-----	B	ALTERED TITLE	12/08/97	KEK	JY
-----	A	RELEASE	11/12/97	KEK	VH

ALL DIMENSIONS IN INCHES		TOLERANCES UNLESS OTHERWISE SPECIFIED		ANGULAR ±1°	DFT. K MEARNS	DATE 03/26/97	CHK	DATE 11/12/97
ALLOY 6063-T5	EST. LB/FT 0.223	.000 TO .125 ± .007	1.001 TO 2.000 ± .0175		PROJECTION KEA	DATE 11/12/97	MFG. KEK	DATE 11/12/97
DIE SIZE 9" 4 PORT	EST. PER. 7.25	.125 TO .500 ± .010	2.001 TO 3.001 ± .025					
EXTR LGTH 7X25:418 8X22:543	FACTOR 32.5	.501 TO 1.000 ± .015	3.001 TO 4.000 ± .025					

CAPCO
Creative Aluminum Products Company
A DIVISION OF WINNEBAGO INDUSTRIES, INC.

SCALE	TITLE	DIE NO.
XX	EXTR-CP INTERLOCK CLAD	128954

THIS IS NOT A WINNEBAGO DESIGN. IT IS WINNEBAGO'S INTERPRETATION OF THE SECTION DESIGNED AND REQUESTED BY ITS CUSTOMER. CUSTOMER SHOULD THOROUGHLY CHECK THE DRAWING AND TEST THE DESIGN BEFORE USING AS WINNEBAGO ACCEPTS NO RESPONSIBILITY OR LIABILITY FOR THE PERFORMANCE OF PRODUCTS PRODUCED THEREFROM. WINNEBAGO MAKES NO WARRANTY OF FITNESS FOR A PARTICULAR PURPOSE WITH REGARD TO THE EXTRUSIONS PRODUCED PURSUANT TO THIS DRAWING. WINNEBAGO'S ONLY WARRANTY SHALL BE AS STATED ON WINNEBAGO'S SALES ORDER ACKNOWLEDGEMENT FORM.

26

Painted Aluminum

DESIGN APPROVAL

Please indicate your approval of this design by signing below

Date _____

Company _____

By _____

Architectural Testing

Report #: C7572.01-201.45

Date: 4-19-2013

Verified by: [signature]

131691A.V01 : 131691010000101 A EXTR-FP SASH CLAD , BM, EX, . Printed: 04/23/99

CUST NO	CUSTOMER	
X	MERRILL	131691

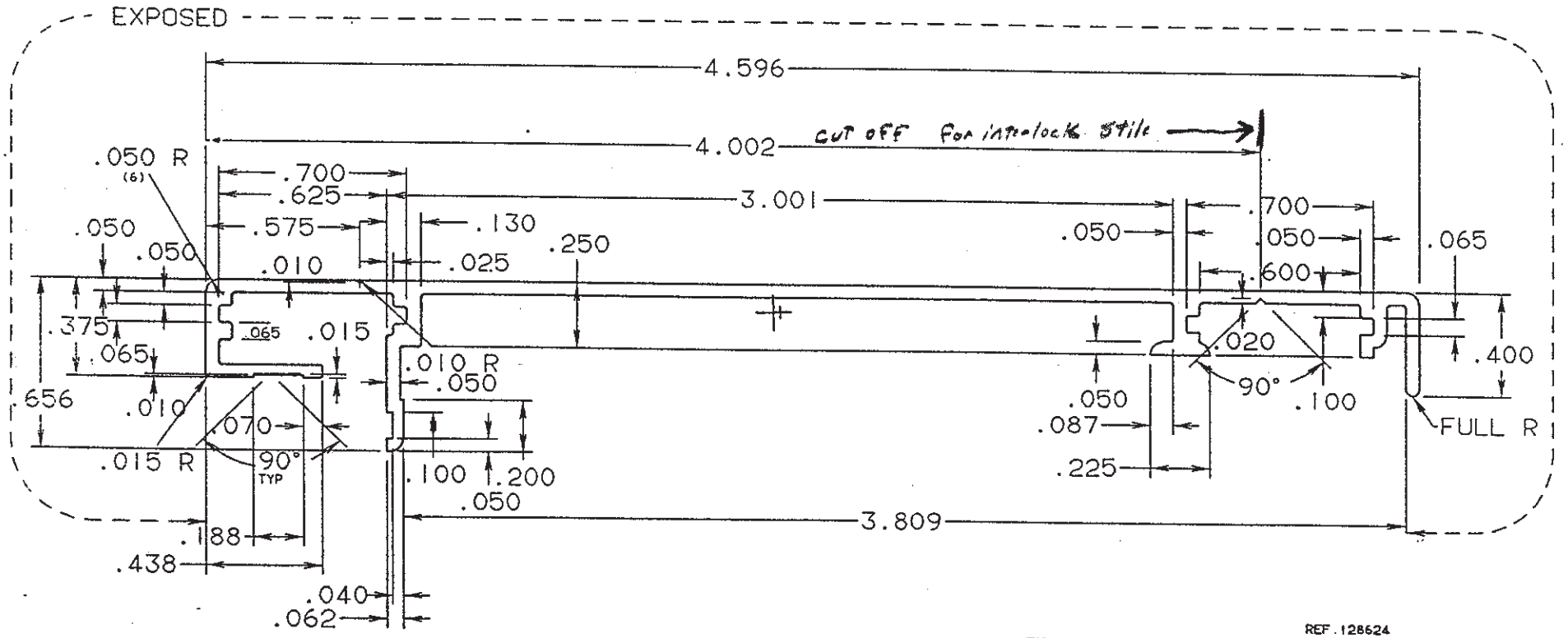

Architectural Testing
Report #: C7572.01-201.45
Date: 4-19-2013
Verified by:

Painted Aluminum

REF. 128624

2. ALL CORNERS 0.010 R UNLESS OTHERWISE SPECIFIED
1. TYP WALL THICKNESS 0.050 UNLESS OTHERWISE SPECIFIED

NOTES: 7X18

ECO	REV	REVISION RECORD	DATE	DFT.	CHK
-----	D	X	X	X	X
-----	C	X	X	X	X
-----	B	X	X	X	X
-----	A	RELEASE	9/22/98	KEK	VH

ALL DIMENSIONS IN INCHES	TOLERANCES UNLESS OTHERWISE SPECIFIED	ANGULAR ±1°	DFT K. KEARNS	DATE 09/11/98	CHK XXXXXXXXXXXXX	DATE 9/22/98
ALLOT 6063-T5 EST. W/FT 0.431	.000 TO .125 ±.007	1.001 TO 2.000 ±.0175	PROJ/DSNR XX/XXXXXXXXXX	DATE 9/22/98	MFG XXXXXXXXXXXXX	DATE 9/22/98
DIE SIZE 9" 1 PORT EST. PER. 13.9	.126 TO .500 ±.010	2.001 TO 3.000 ±.020				
EXTR 7X26=216.4 LGTH 8X26=280.7 FACTOR 32.2	.501 TO 1.000 ±.015	3.001 TO 4.000 ±.025				

CAPCO
Creative Aluminum Products Company
A DIVISION OF WINNEBAGO INDUSTRIES, INC

SCALE YYY | TITLE EXTR-FP SASH CLAD | DIE NO 131691

THIS IS NOT A WINNEBAGO DESIGN. IT IS WINNEBAGO'S INTERPRETATION OF THE SECTION DESIGNED AND REQUESTED BY ITS CUSTOMER. CUSTOMER SHOULD THOROUGHLY CHECK THE DRAWING AND TEST THE DESIGN BEFORE USING AS WINNEBAGO ACCEPTS NO RESPONSIBILITY OR LIABILITY FOR THE PERFORMANCE OF PRODUCTS PRODUCED THEREFROM. WINNEBAGO MAKES NO WARRANTY OF FITNESS FOR A PARTICULAR PURPOSE WITH REGARD TO THE EXTRUSIONS PRODUCED PURSUANT TO THIS DRAWING. WINNEBAGO'S ONLY WARRANTY SHALL BE AS STATED ON WINNEBAGO'S SALES ORDER ACKNOWLEDGEMENT FORM.

CUSTOMER	DIE NUMBER
MERRIL MILLWORK	085821

THIS IS NOT A WINNEBAGO DESIGN IT IS WINNEBAGO'S INTERPRETATION OF THE SECTION DESIGNED AND REQUESTED BY ITS CUSTOMER CUSTOMER SHOULD THOROUGHLY CHECK THE DRAWING AND TEST THE DESIGN BEFORE USING AS WINNEBAGO ACCEPTS NO RESPONSIBILITY OR LIABILITY FOR THE PERFORMANCE OF PRODUCTS PRODUCED THEREFROM WINNEBAGO MAKES NO WARRANTY OF FITNESS FOR A PARTICULAR PURPOSE WITH REGARD TO THE EXTRUSIONS PRODUCED PURSUANT TO THIS DRAWING WINNEBAGO'S ONLY WARRANTY SHALL BE AS STATED ON WINNEBAGO'S SALES ORDER ACKNOWLEDGEMENT FORM

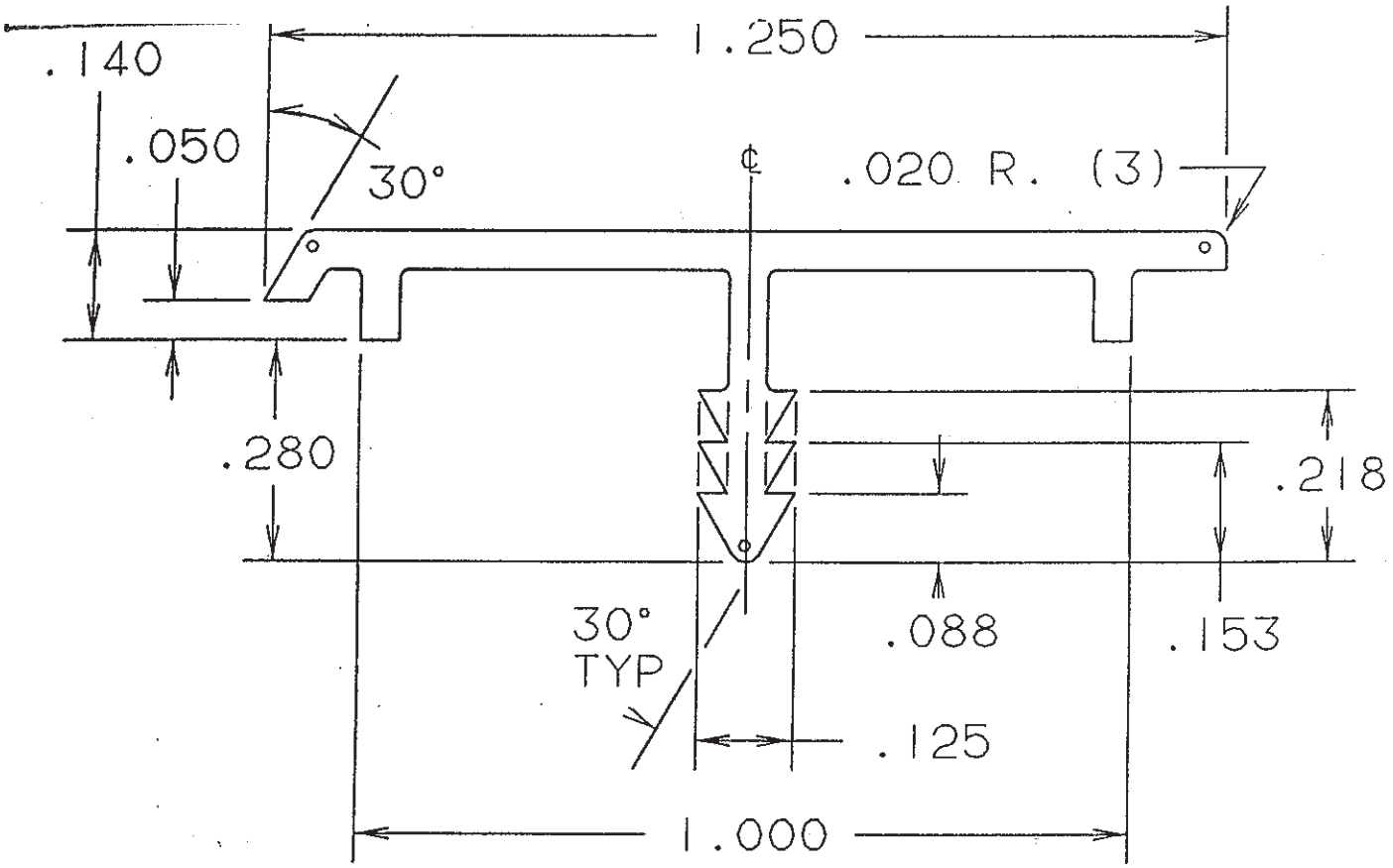

Architectural Testing
Report #: C7572.01-201.45
Date: 4-19-2013
Verified by: Chad E. Johnson

EXPOSED SURFACE

ACTUAL SIZE

ALL CORNERS 0.010 R UNLESS OTHERWISE SPECIFIED.
TYP WALL THICKNESS 0.050 UNLESS OTHERWISE SPECIFIED.

OTES:

ECO	REV	REVISION RECORD	DATE	DFT	CHK
	D				
-----	C	CHG DESCRIPTION	10/05/94	LLJ	
21642	B	CHG FROM 6 PORT TO 8 PRT	09/18/87	SCJ	SED
	A	RELEASE			

XTRUSION & DIE DATA

ST REA 0.097	FACTOR 37.44
ST /FT 0.114	EXTR 7X26= 818 LGTH 8X26=1061
ST ER 4.268	DIE SIZE 9X1 8 PORT

OLERANCES UNLESS OTHERWISE SPECFIED	ANGULAR ±1°
.000 TO .125 ± 007	1.001 TO 2.000 ±.0175
.126 TO .500 ± 010	2 001 TO 3.000 ±.020
501 TO 1.000 ± 015	3 001 TO 4.000 ±.025

ALLOY 6063 - T5

CAPCO
Creative Aluminum Products Company
A DIVISION OF WINNEBAGO INDUSTRIES, INC

DFT	DATE	CHK	DATE	MFG	DATE
K BROWN	05/14/86	R F	08/19/86		
SCALE 4/1		PROJ R F	DATE 08/19/86	QUAL	DATE

TITLE
EXTR-CP EDGE COVER

DIE NO
085821

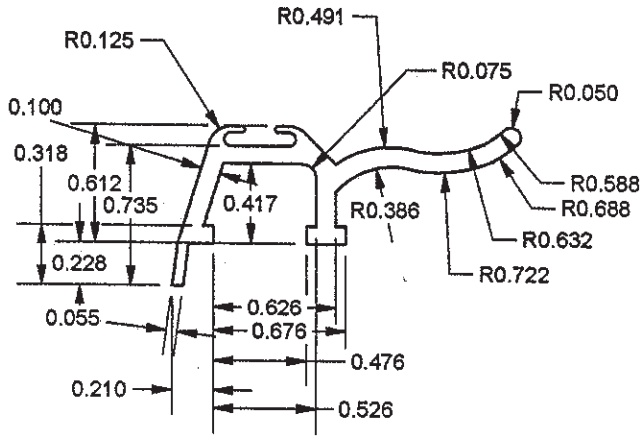

10

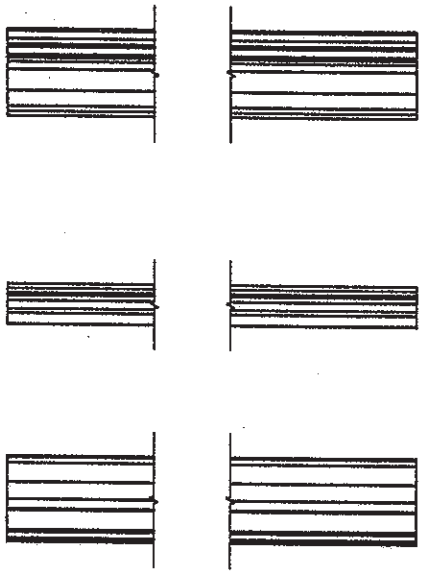

Report #:	C7572.01-201.45
Date:	4-19-2013
Verified by:	

Architectural Testing

Merrill Millwork
PARK-VUE
PATIO DOORS

Title	Interlock Vinyl
DWG NO	D10640
Drawn By: Mark R. Meyer 1/22/2003	Part Number: ***
REV	0
Material: PVC - Extrusion [redacted]	SHEET 1 OF 1

interlock vinyl.ipt

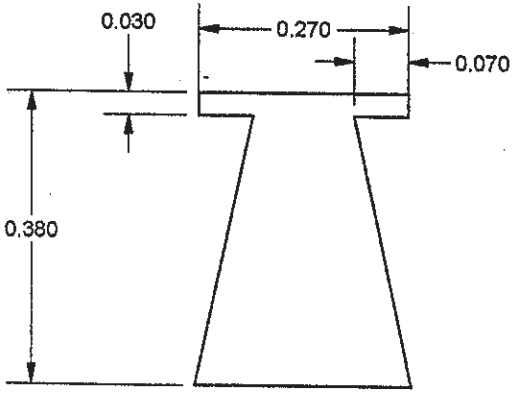

(12)

Report #:	C7572.01-201.45
Date:	4-19-2013
Verified by:	Chad E. Jobson

Architectural Testing

Merrill Millwork
PARK-VUE
PATIO DOORS

Drawn By: Mark R. Meyer 1/14/2003	Part Number: ***	REV 0
Material: pile	SHEET 1 OF 6	

Title: .380 Pile Weatherstrip

DWG NO D10580

2 panel - Sill Pile Weatherstrip inside

PRELIMINARY PRINT

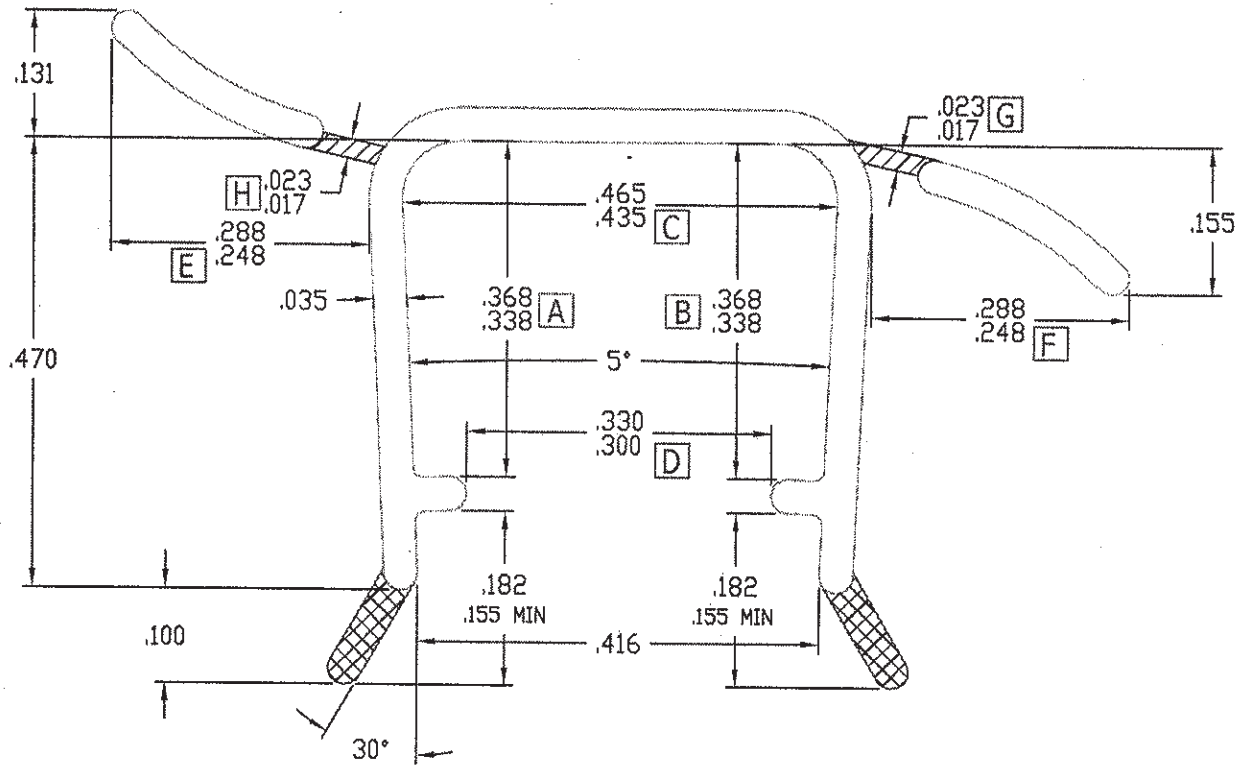

ALCRYN FLEX

PVC FLEX

Architectural Testing

Report #: C7572.01-201.45

Date: 4-19-2013

Verified by:

NO.	DATE	BY	REVISIONS
1			
2			
3			
4			
5			
6			
7			
8			
9			
10			
11			
12			

PRINT APPROVAL	RIGID WALL: .035 ±.005 (EXCEPT AS NOTED)
QUALITY SUPERVISOR	FLEX. WALL: .035 ±.005 (EXCEPT AS NOTED)
	OTHER WALL: .020 ±.005 (EXCEPT AS NOTED)
ENGINEERING MANAGER	CAP WALL: ± (EXCEPT AS NOTED)
	TOLERANCES (EXCEPT AS NOTED)
COMPUTER UPDATED	DECIMAL ± .020
	FRACTIONAL ± 1/32
	ANGULAR ± 3 °

PLASTIC PROFILES - PPI

AMESBURY GROUP

MERRILL MILLWORK

PARTING STOP

Q5268

SCALE: 5: 1

DATE: 5: 1

DRAWN BY: DCL

DUCTION PRINT

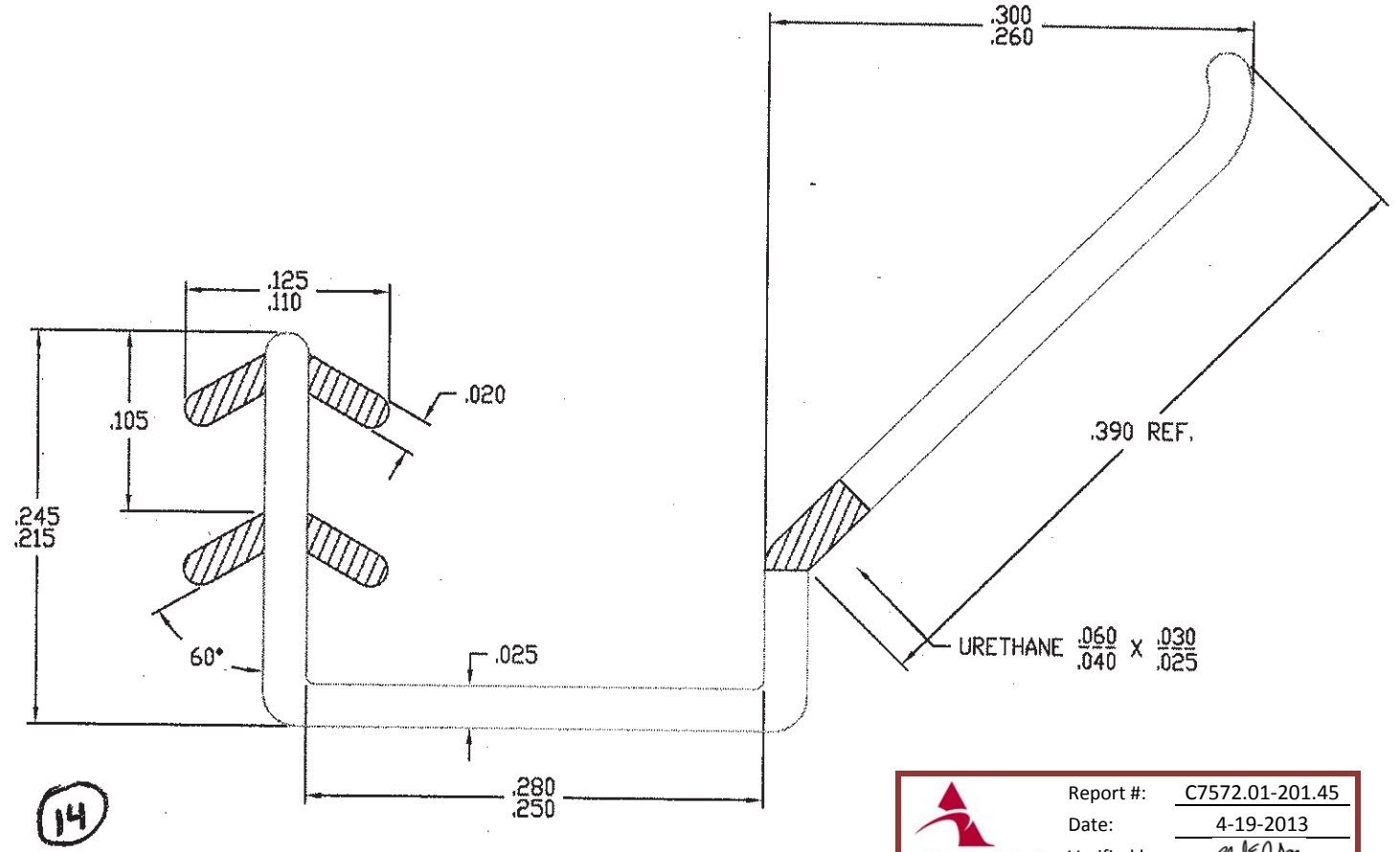

Architectural Testing

Report #: C7572.01-201.45
Date: 4-19-2013
Verified by: Chad E. Jodon

NO	DATE	BY	REVISIONS
1	8/5/99	DCL	UPDATED, CORRECTED .390 REF WAS .400 REF
2	11/9/00	DCL	REMOVED INSERTION NOTE
3			
4			
5			
6			
7			
8			
9			
10			
11			
12			

PRINT APPROVAL	RIGID WALL: .025 ±.005 (EXCEPT AS NOTED)
QUALITY SUPERVISOR	FLEX. WALL: ± (EXCEPT AS NOTED)
	OTHER WALL: .020 ±.005 (EXCEPT AS NOTED)
ENGINEERING MANAGER	CAP WALL: ± (EXCEPT AS NOTED)
	TOLERANCES (EXCEPT AS NOTED)
COMPUTER UPDATED	DECIMAL ± .020
	FRACTIONAL ± 1/32
	ANGULAR ± 3 °

AMESBURY GROUP INC.
EXTRUDED PRODUCTS DIVISION
CANNON FALLS, MN 55009

E.P.D.
HINGED P.D. W/S

SCALE: 10: 1
DATE: 6/15/92
DRAWN BY: TP

PP0810

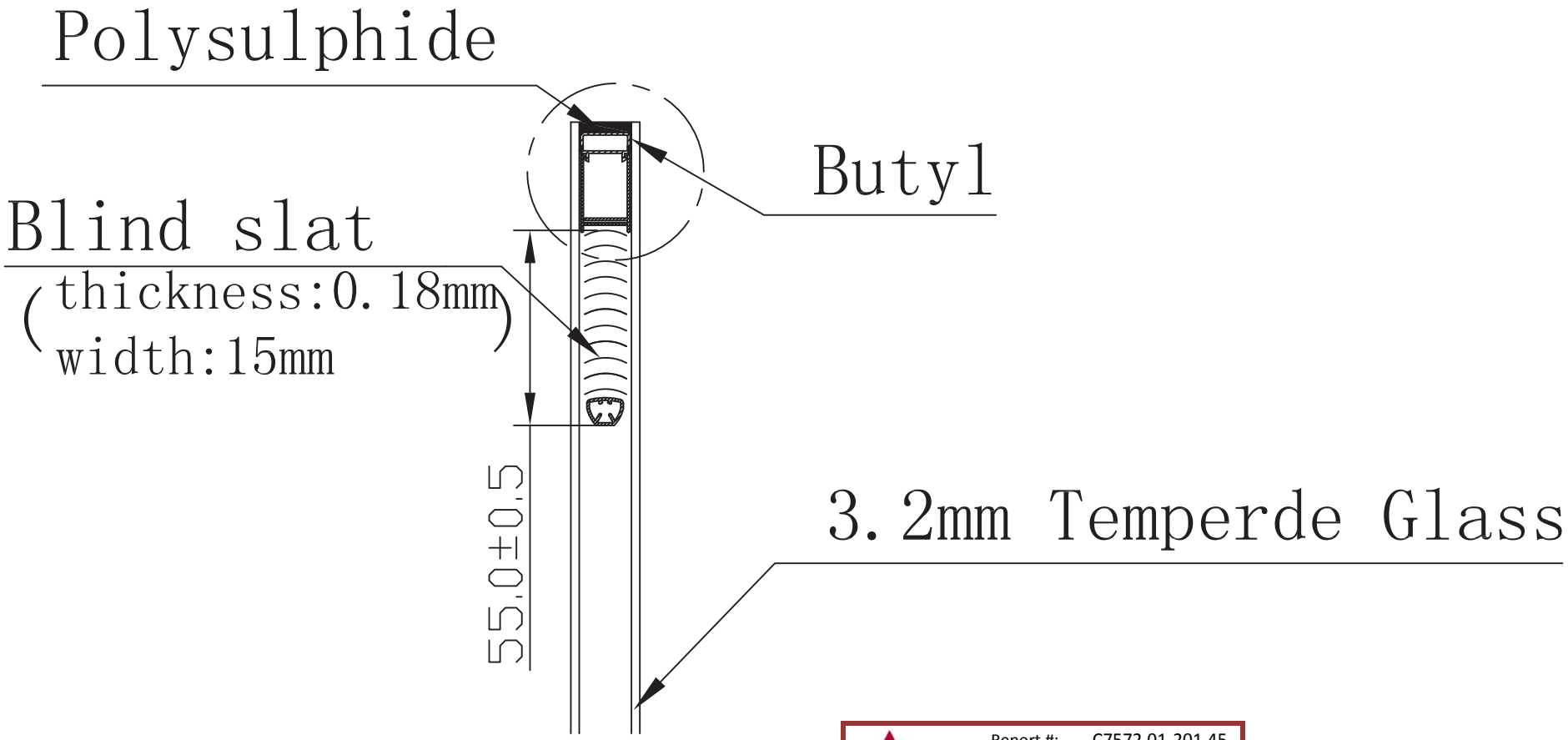

Architectural Testing

Report #: C7572.01-201.45
Date: 4-19-2013
Verified by: Chad E. Jordan

Sightline

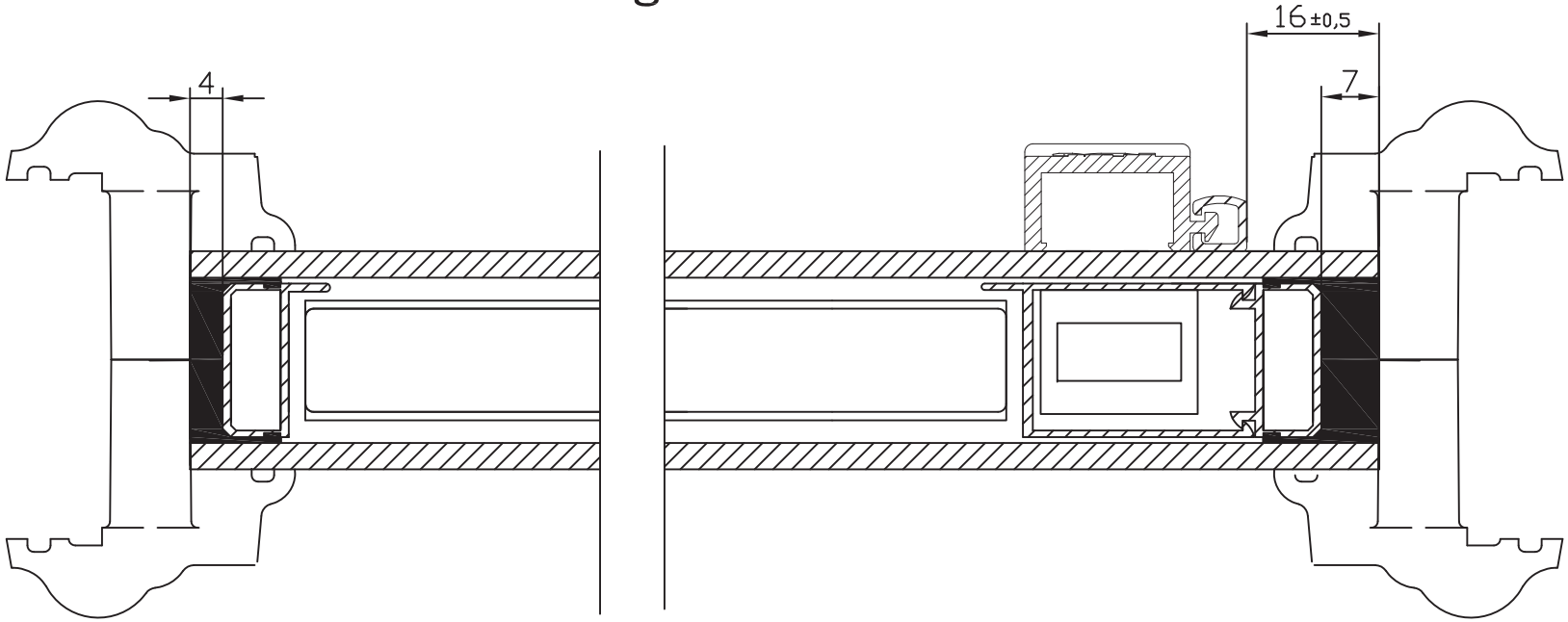

Architectural Testing

Report #: C7572.01-201.45

Date: 4-19-2013

Verified by:

RECTANGULAR MUNTIN BAR

Part #	Nominal Size	A Air Space	B Width
G48		0.175	0.375
G57	3/16x9/16	0.188	0.555
G51	3/16x5/8	0.188	0.610
G31658	3/16x5/8	0.188	0.625
G56	3/16x3/4	0.188	0.665
G31634	3/16x3/4	0.188	0.770
G3161	3/16x1	0.188	1.000
G50	1/4x5/8	0.235	0.610
G58	1/4x3/4	0.235	0.765
G1438	1/4x3/8	0.250	0.375
G51658	5/16x5/8	0.312	0.625
G51634	5/16x3/4	0.312	0.750
G59	3/8x7/16	0.375	0.410
G53	3/8x7/16	0.375	0.438
G3858	3/8x5/8	0.375	0.625
G71658	7/16x5/8	0.438	0.625
G71634	7/16x3/4	0.438	0.750
G91658	9/16x5/8	0.563	0.625
G91634	9/16x3/4	0.563	0.750
H57	3/16 x 9/16	0.188	0.555
H31658	3/16 x 5/8	0.188	0.625
H56	3/16x3/4	0.188	0.795
H1458	1/4 x 5/8	0.235	0.625
H3858	3/8 x 5/8	0.375	0.625
J51	3/16x5/8	0.188	0.610
J31658	3/16 x 5/8	0.188	0.625
J56	3/16x3/4	0.188	0.795
J3161	3/16x1	0.188	1.000

"G" Muntin is provided in .018" Gauge including paint
"H" Muntin is provided in .020" Gauge including paint
"J" Muntin is provided in .024" Gauge including paint

Other sizes of "H" or "J" Muntin bar are available on request
[illegible] available on request - call for details

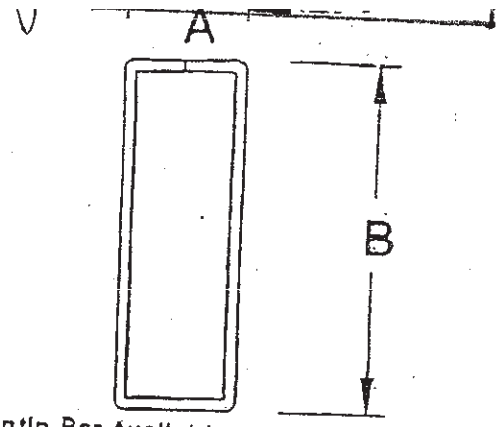

Muntin Bar Available in:

Painted
- White
- A-White
- Bright White
- Bronze
- A-Bronze
- Tan
- Champagne
- Earth Tone

Anodized
- Clear
- Dark Bronze
- Light Bronze
- Gold
- Black

Mill Finish

HANDLING OF MUNTIN - Muntin bar should be handled carefully to avoid marring the finish. Saws and cutting surfaces should be kept clean and free of metal shavings. To avoid damaging the paint, do not clean painted muntin bar with anything other than a mild household glass cleaner. We recommend gently wiping the muntin bar with a soft clean cloth before installation in an I.G. unit.

TwoTone Muntin - stock colors, coated with Hygrade's patented process, and custom combinations of twotone muntin are available. Call for sizes, pricing and color combinations.

Architectural Testing

Report #: C7572.01-201.45
Date: 4-19-2013
Verified by: Chad E. Jordan

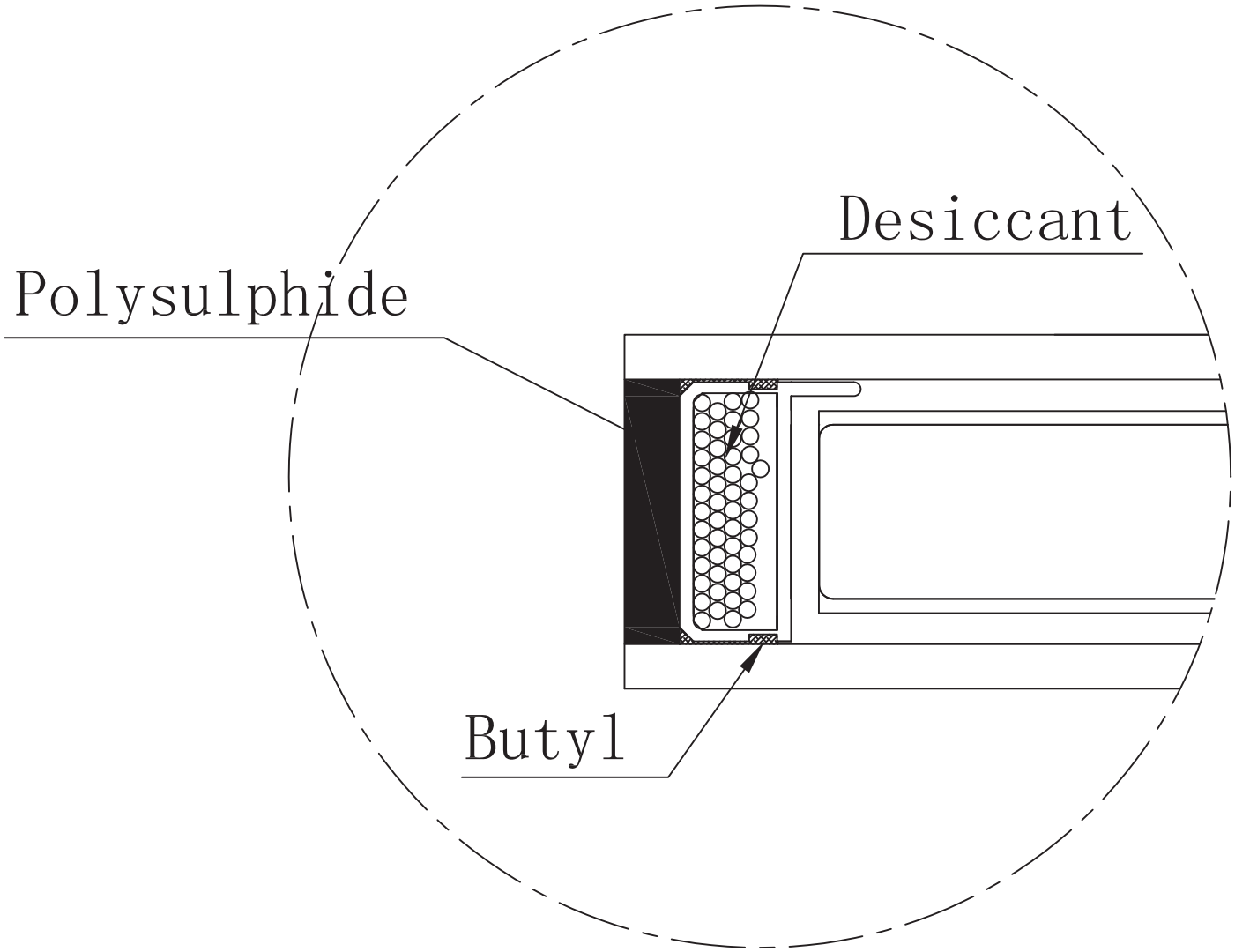

Architectural Testing

Report #: C7572.01-201.45

Date: 4-19-2013

Verified by:

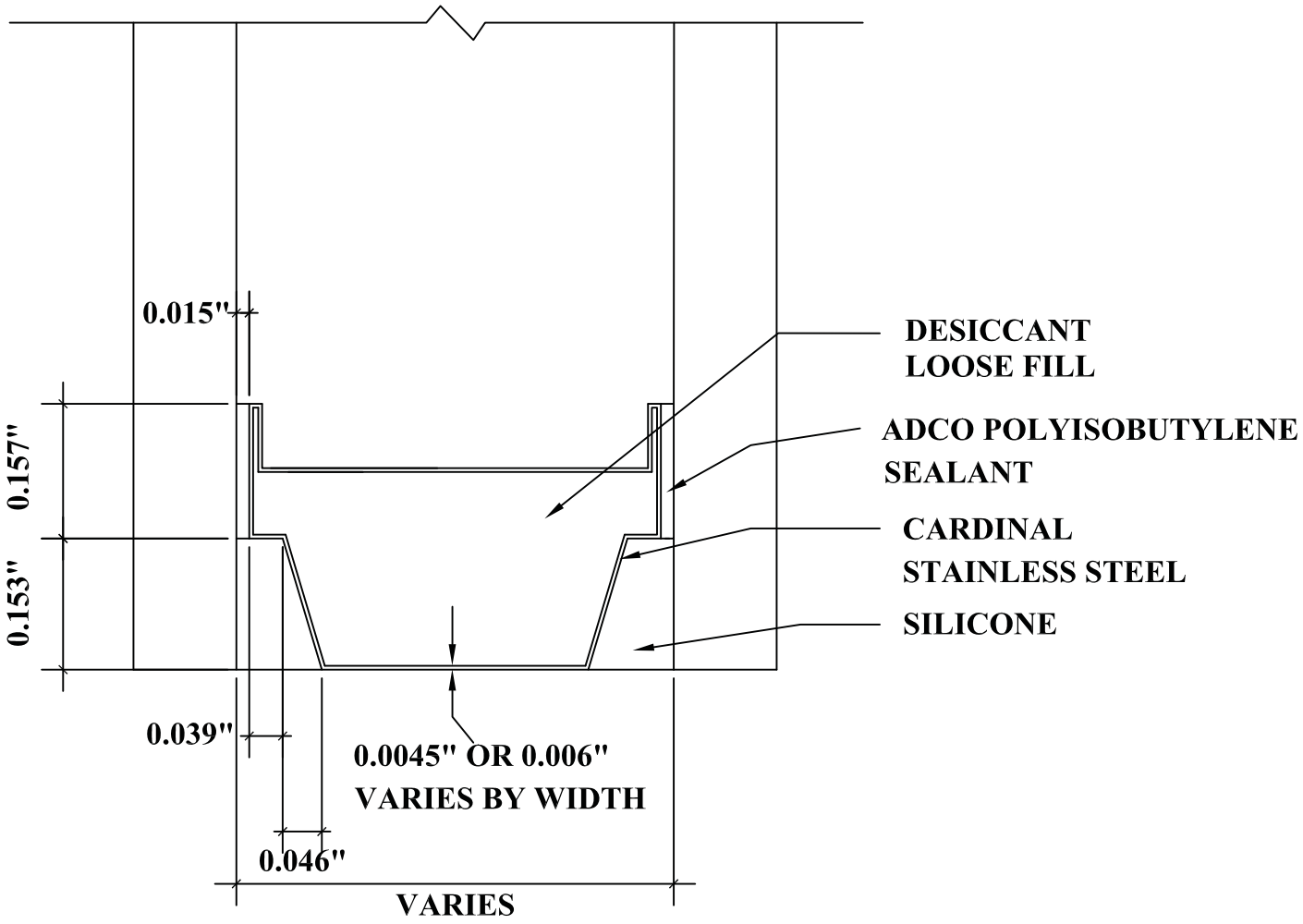

DETAIL FOR THERMAL MODELING OF
CARDINAL XL EDGE SPACER (SS-D)

Architectural Testing

Report #: C7572.01-201.45
Date: 4-19-2013
Verified by: Chad E. Jordan

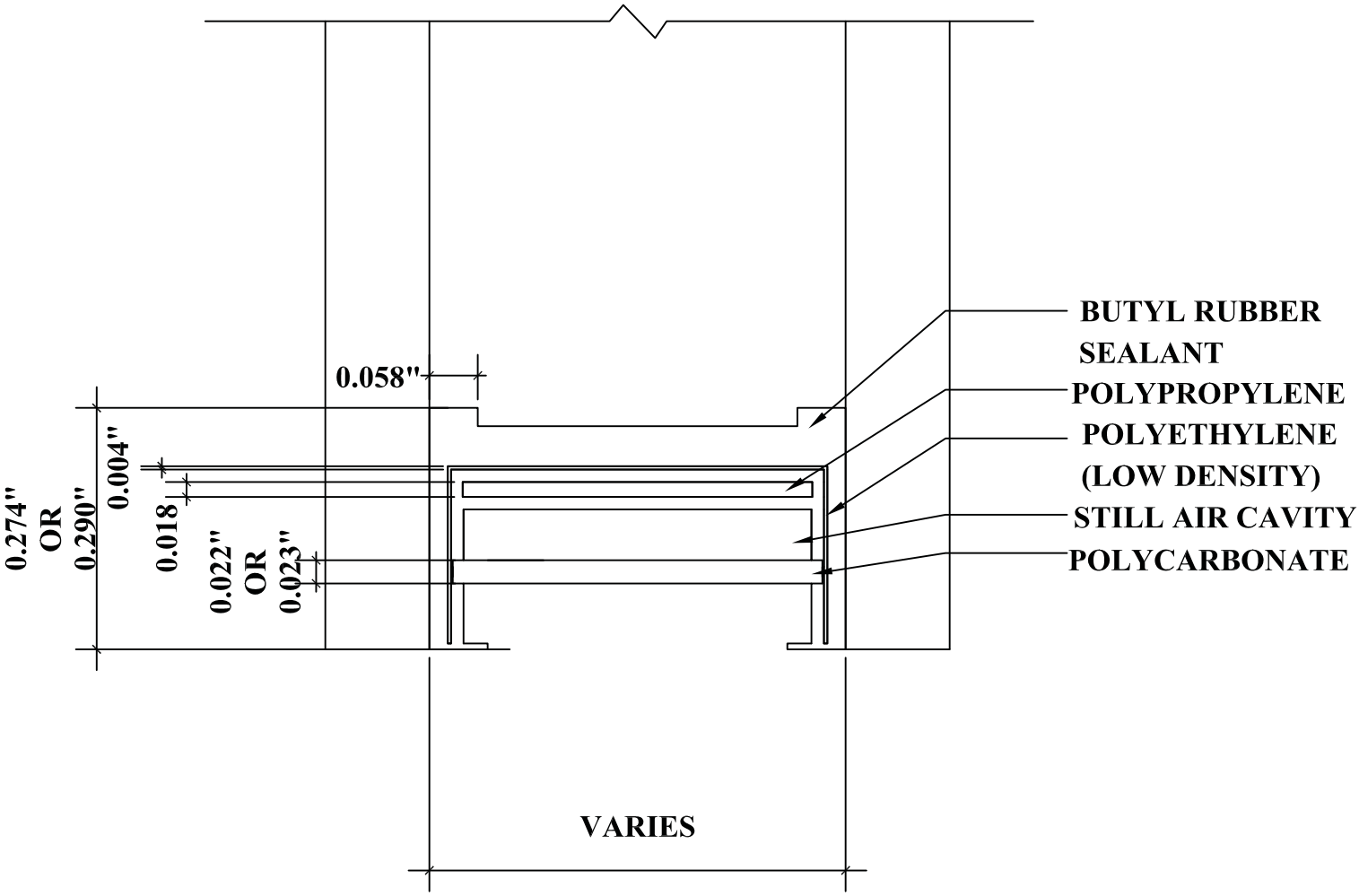

DETAIL FOR THERMAL MODELING OF
TRUSEAL DURALITE SPACER (P1-S)

Architectural Testing

Report #: C7572.01-201.45
Date: 4-19-2013
Verified by: Chad E. Jordan

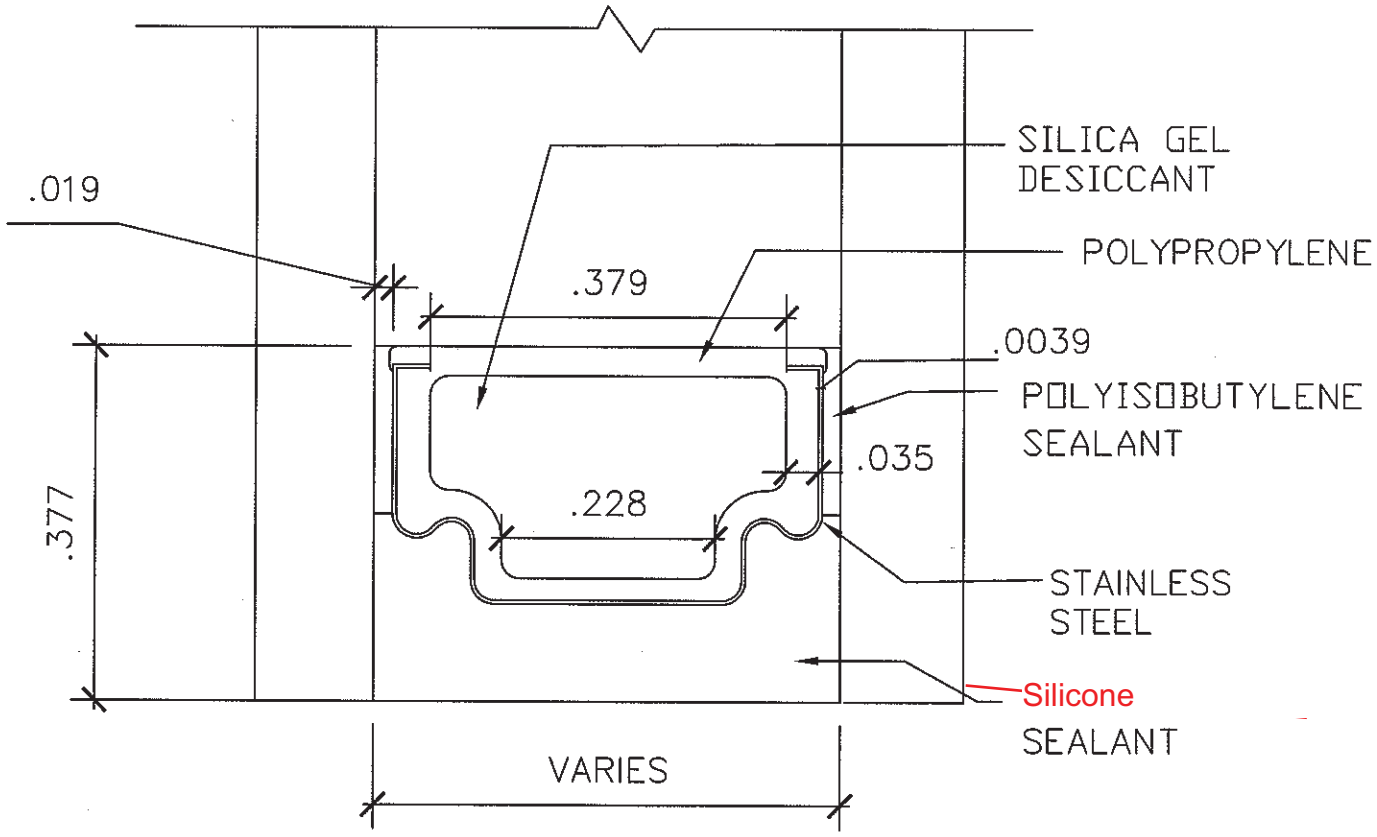

DETAIL FOR THERMAL MODELING OF
TGI WAVE SPACER (TS-D)

Architectural Testing

Report #: C7572.01-201.45
Date: 4-19-2013
Verified by: Chad E. Jordan